GELEN

PRODUCT BROCHURE



WB SERIES

WOBBLER FEEDERS

FEEDS THE BIG STONE. SCALPS THE FINES.

WB SERIES

VERSATILE FEEDING FOR STICKY, MUDDY RUN-OF-MINE.

When clay and mud blind a conventional grizzly, a wobbler feeder keeps working. WB feeders carry oversize forward at a controlled rate on shafts of lobed paddles set 90° apart; as they turn, fines, mud and dirt drop through the gaps between them, and the turning keeps those gaps open. Two models, 1,400 and 1,600 mm wide.

2
MODELS IN THE SERIES

1.6 × 3.0 m
LARGEST DECK

520 t/h
MAX. THEORETICAL OUTPUT

37 kW
MAX. INSTALLED POWER

APPLICATIONS

- WET & STICKY RUN-OF-MINE
- CLAY-BOUND QUARRIES & PITS
- PRIMARY CRUSHER FEED
- SCALPING MUD & FINES
- MINING & RECYCLING

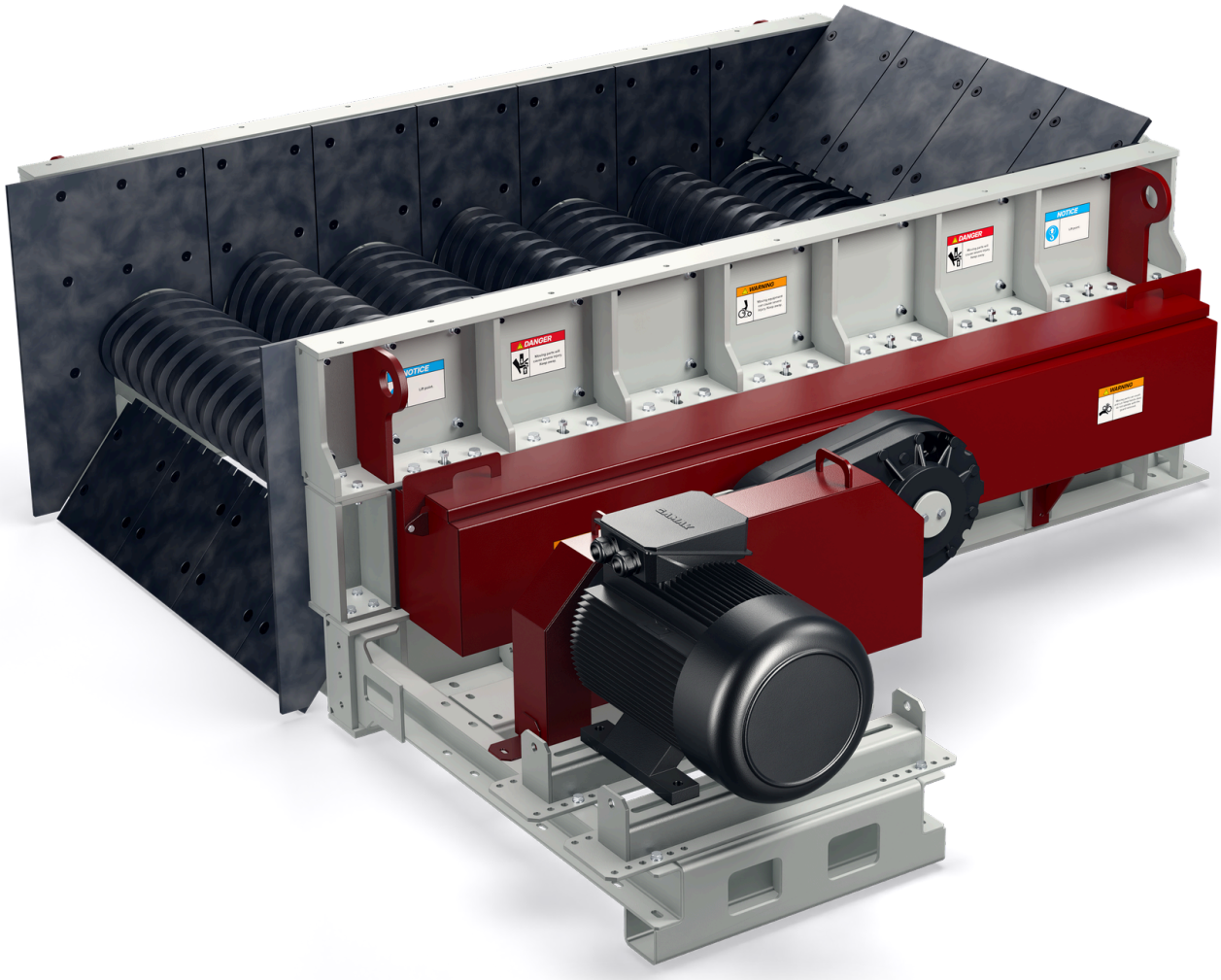

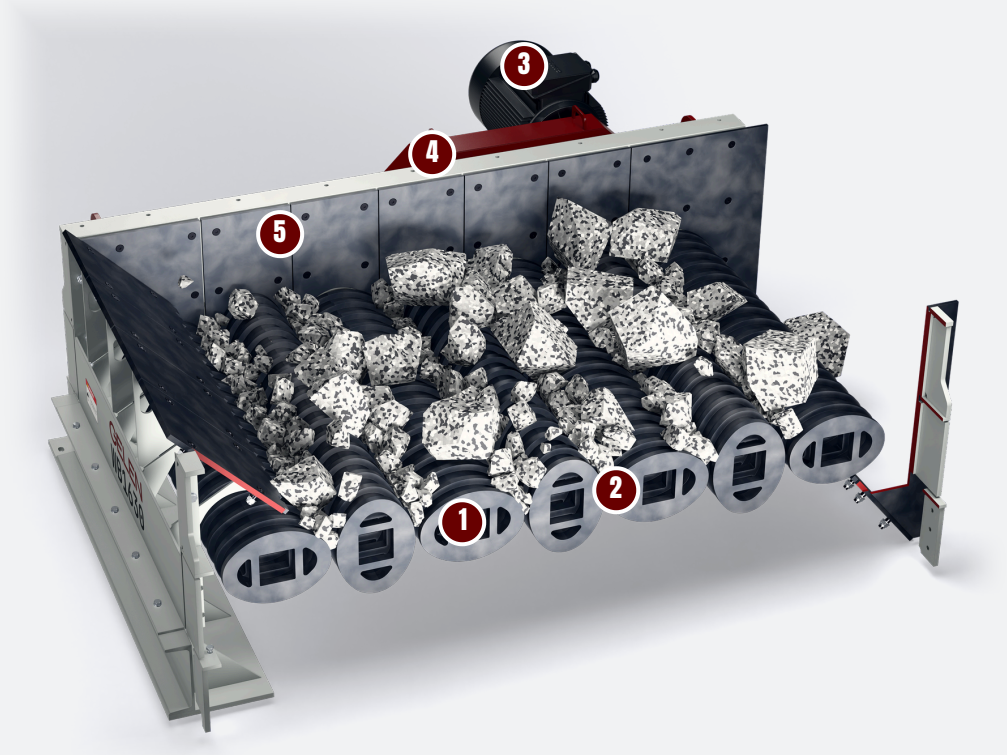

DESIGN

SEVEN SHAFTS, ONE CHAIN.

Seven lobed shafts turn together, linked by roller chains to one drive: the bed rocks and walks forward while the fines drop through. Shown: a WB1630.

1 Seven wobbler shafts

Lobed paddles set 90° apart on every shaft; all seven turn together and the bed rocks and walks forward.

2 The same gap all the way round

Neighbouring paddles keep a constant clearance; fines, mud and dirt drop through, the rest rides on.

3 One motor, one gearbox

37 kW through four V-belts to a shaft-mounted gearbox on the drive shaft.

4 Roller-chain train

Six roller chains hold every shaft in its station, all at one speed.

5 Lined side walls

Bolted wear plates on the side walls and the feed chute, renewed zone by zone.

Feeds and scalps in one

- Controlled feed of oversize to the primary crusher
- Fines, mud and dirt fall through the gaps
- Less clay reaches the crusher and the screens

Made for sticky feed

- Turning paddles roll and break up sticky material instead of letting it pack
- A constant gap between neighbouring paddles
- Wide decks for the large, mixed feed of pits and clay-bound quarries

One simple drive

- One motor, V-belts and a shaft-mounted gearbox
- Roller chains keep every shaft at the same speed
- Bolted wear plates renewed zone by zone

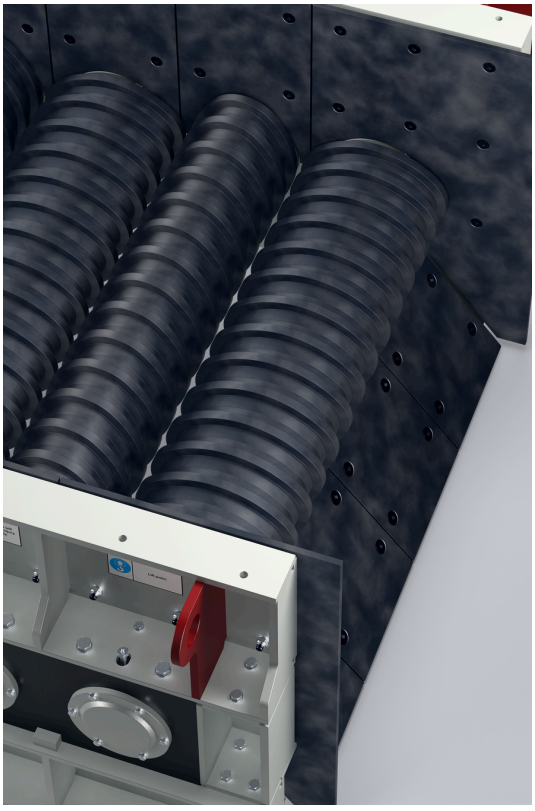



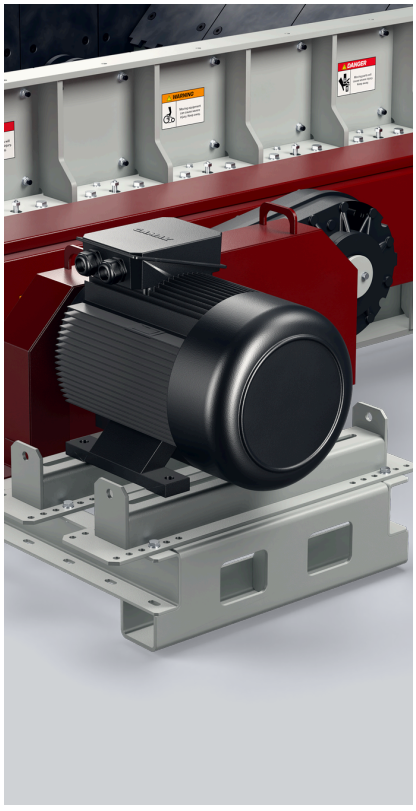

SPECIFICATIONS

WOBBLER FEEDERS - WB SERIES

MODEL	WIDTH mm	LENGTH mm	POWER kW	THEORETICAL CAPACITY mtph
WB1430	1400	3000	37	290 - 450
WB1630	1600	3000	37	330 - 520

Values are nominal and depend on feed material, gradation and moisture. Metric units; an imperial edition of this brochure is available on request.
Theoretical capacity is calculated for material with a bulk density of 1.6 t/m^3 (100 lb/ft^3) and calibrated against published wobbler feeders of the same widths.
Actual capacity depends on the material, its moisture and clay content, and the lump size.



CHOOSE YOUR MODEL

ONE SERIES. THE WHOLE RANGE.

Two models, 1,400 and 1,600 mm wide, both 3 m long and driven by 37 kW. Each bar spans a model's theoretical capacity at a bulk density of 1.6 t/m³; the note gives its size.

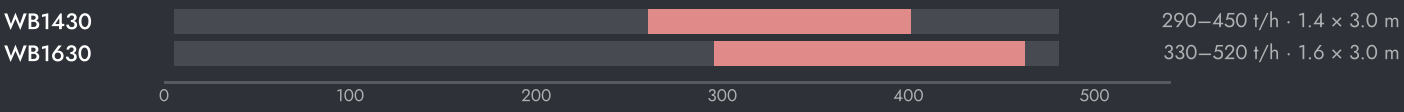

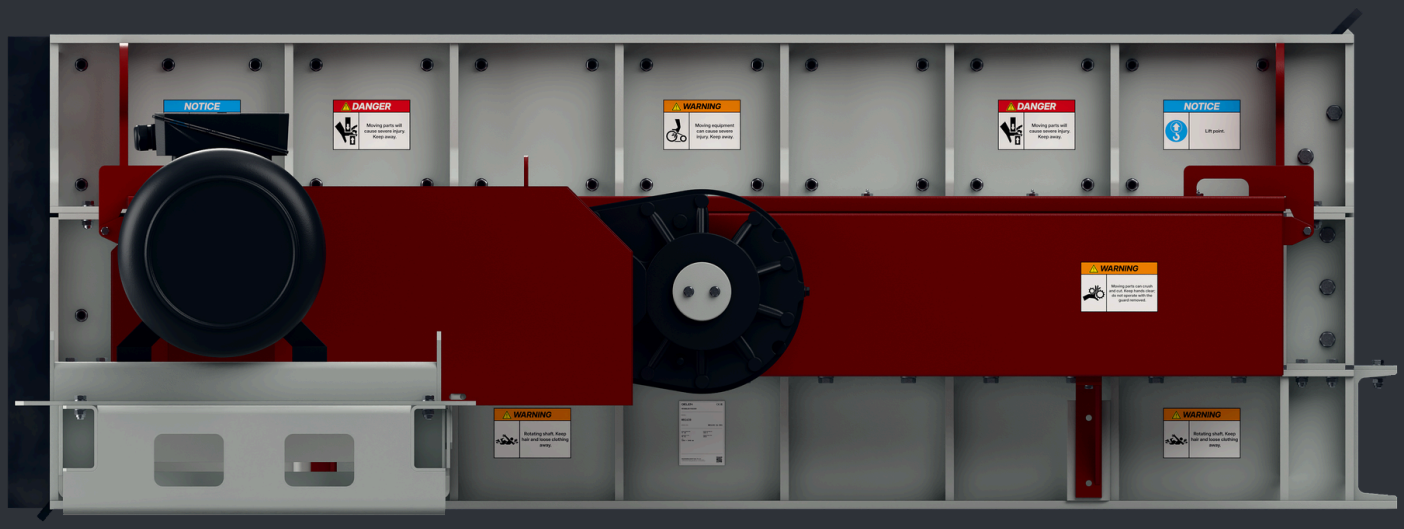

SETTING THE MACHINE

- Keep the feed onto the shafts steady, so they roll a consistent bed.
- Inspect the paddle tips and the gaps regularly; worn paddles widen the gaps and change what bypasses the crusher.
- Check the drive, the chains and the lubrication points on a schedule.

HOW TO CHOOSE

01 Start from the feed: tonnage, largest lump, and how much clay and moisture it carries.

02 Choose the width for the lump size and the tonnage; read the theoretical capacity off the bar.

03 Use a wobbler where sticky feed blinds a vibrating grizzly; with dry, free-flowing rock a vibrating grizzly feeder is simpler.



IN THE PLANT

WHERE IT WORKS.

The wobbler sits under the dump hopper at the head of the plant. It feeds the primary crusher and drops the fines, mud and dirt onto a by-pass conveyor, so the clay never reaches the crusher or the screens.

TYPICAL PLANT FLOW

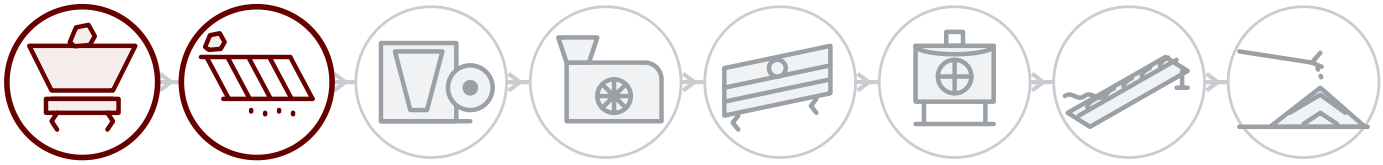

01 **Blast & feed**

02 **Scalping**

03 Primary crushing

04 Secondary crushing

05 Screening

06 Tertiary & sand

07 Washing

08 Stockpile & load-out

BEHIND EVERY MACHINE

Field service

Installation, commissioning and inspection by GELEN engineers, on site anywhere we sell.

Spares by serial number

Every machine has a serial and a QR on its nameplate. Scan it, and its parts list, manuals and service history open — and a spares order is one tap away.

Remote support

Production data, alarms and performance analytics from every connected plant, with support from the works.

CONTACT

TALK TO THE WORKS.

ASO 1. OSB, Oğuz Cd. No: 31
06930 Sincan, Ankara, Türkiye

PHONE	+90 312 267 06 20
E-MAIL	gelenmakina@gelenmakina.com
WEB	gelenmakina.com

SCAN FOR THE PRODUCT PAGE, CATALOGUE AND ENQUIRY FORM.

Full specifications, drawings and every other GELEN machine are in the Products Catalogue.

