GELEN

PRODUCT BROCHURE



RB SERIES

RECIPROCATING FEEDERS

CONTROLLED DISCHARGE, STROKE BY STROKE.

RB SERIES

A STEADY FEED FROM ANY HOPPER, STROKE BY STROKE.

RB reciprocating feeders draw material out of hoppers and bunkers with a simple back-and-forth plate motion. On the forward stroke the plate pushes the load toward the transfer point; on the return stroke the material settles against the rear wall of the hopper. The stroke rate is adjustable, so the feed to the crusher, screen or conveyor can be set precisely.

4.6 × 19.7 ft
PLATE

783 stph
MAX. THEORETICAL OUTPUT

74 hp
MAX. INSTALLED POWER

APPLICATIONS

- HOPPER & BUNKER DISCHARGE
- RECLAIM TUNNELS
- CRUSHER & SCREEN FEED
- ORE & BULK MINERALS
- RECYCLED MATERIAL

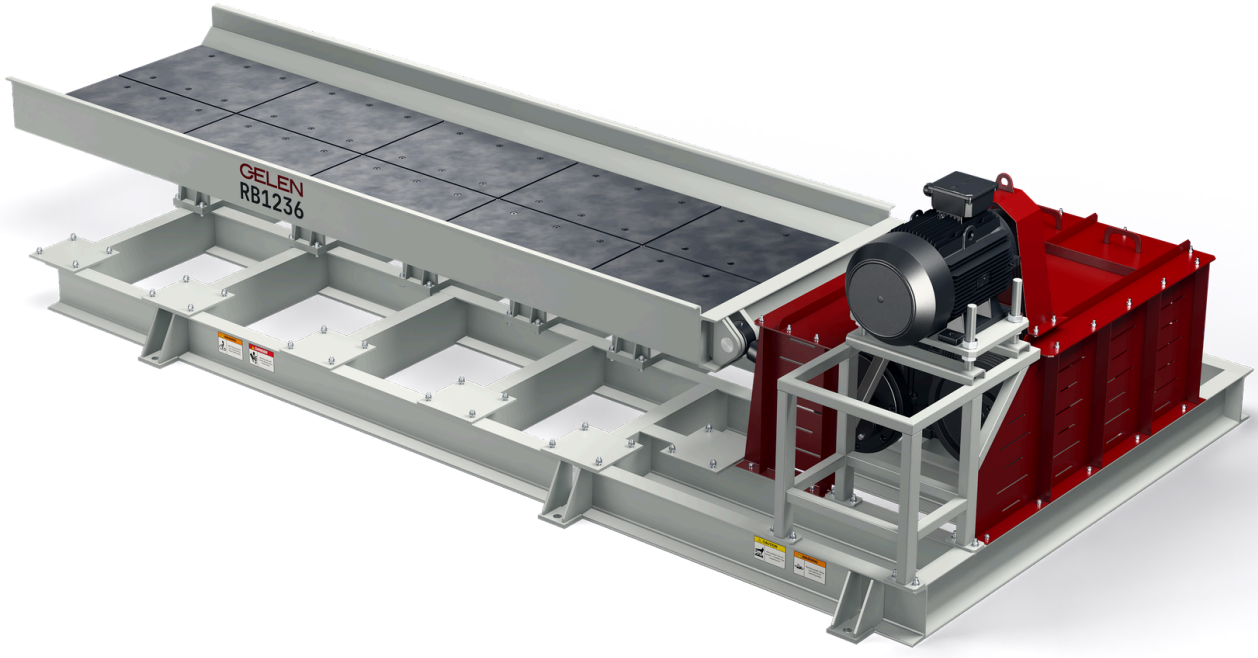

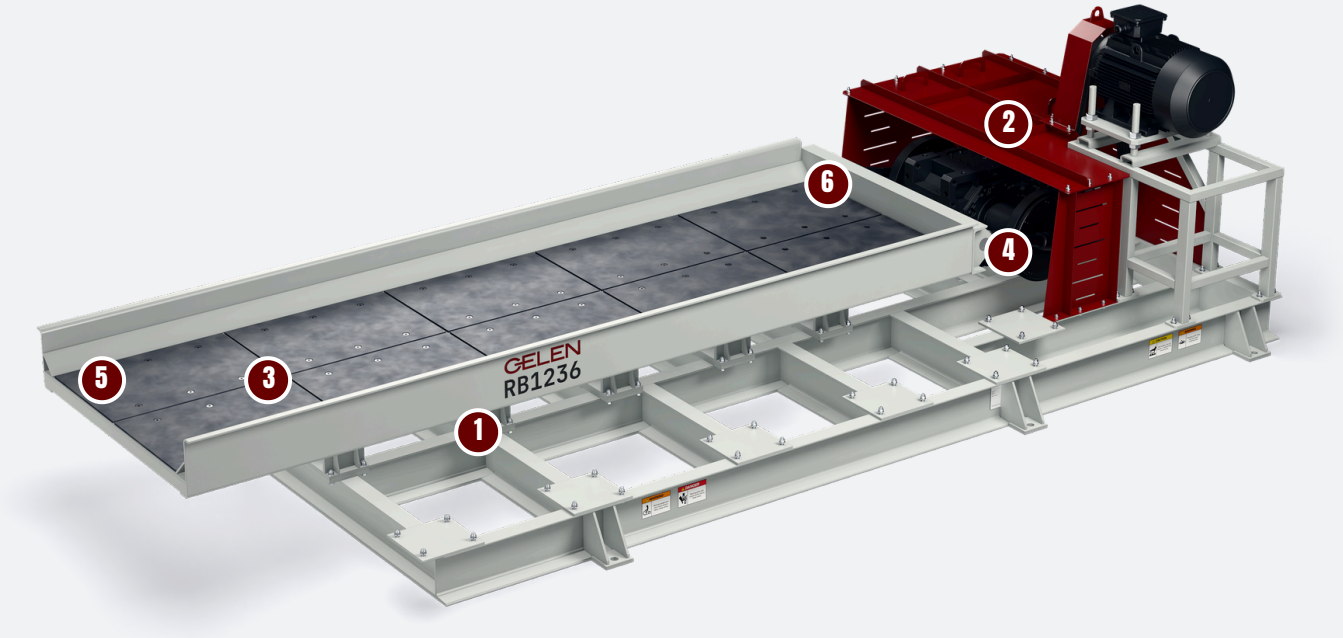

DESIGN

ANATOMY OF AN RB.

A lined tray on rollers, pushed back and forth by a crank: the load in the hopper moves only when the tray does. Shown: an RB1236.

1 Tray on rollers
The lined tray rides on ten flanged support rollers under its runner bars.

2 Crank drive
A motor turns the gearbox through V-belts; two crank discs and connecting rods push the tray back and forth.

3 Replaceable liners
Bolted wear plates line the tray floor where the load bears, each renewed on its own.

4 Crank and connecting rods
The cranks set a fixed stroke; the stroke rate sets the feed.

5 Forward stroke
During the forward stroke, material is pushed toward the transfer point, starting the flow.

6 Return stroke
On the return stroke, the material settles against the rear wall of the hopper, keeping the feed consistent.

Positive, controlled feed

- The tray pushes the load stroke by stroke; feeding does not depend on vibration or free flow
- The stroke rate sets the feed rate
- A steady feed to the crusher, screen or conveyor

Built for the bunker

- The material rests against the rear wall on the return stroke
- Bulky, uneven and abrasive material handled with little degradation
- Suits hoppers, bunkers and reclaim tunnels

Simple to keep running

- A simple mechanism with few moving parts
- Bolted wear liners renewed one at a time
- Drive, pivots and lubrication points on a simple inspection schedule

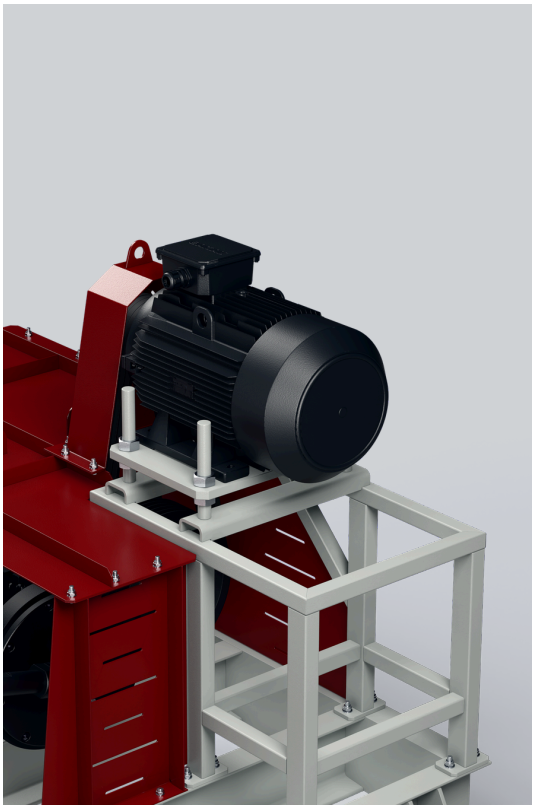





SPECIFICATIONS

RECIPROCATING FEEDERS - RB SERIES

MODEL	WIDTH in	LENGTH in	POWER hp	THEORETICAL CAPACITY stph
RB1460	55.1	236.2	74	364 - 783

Values are nominal and depend on feed material, gradation and moisture. Imperial units converted from the metric originals; a metric edition of this brochure is available on request.
Theoretical capacity is calculated from the plate width, stroke and stroke rate for material with a bulk density of 1.6 t/m^3 (100 lb/ft^3). Actual capacity depends on the material, the gate opening and the stroke settings.

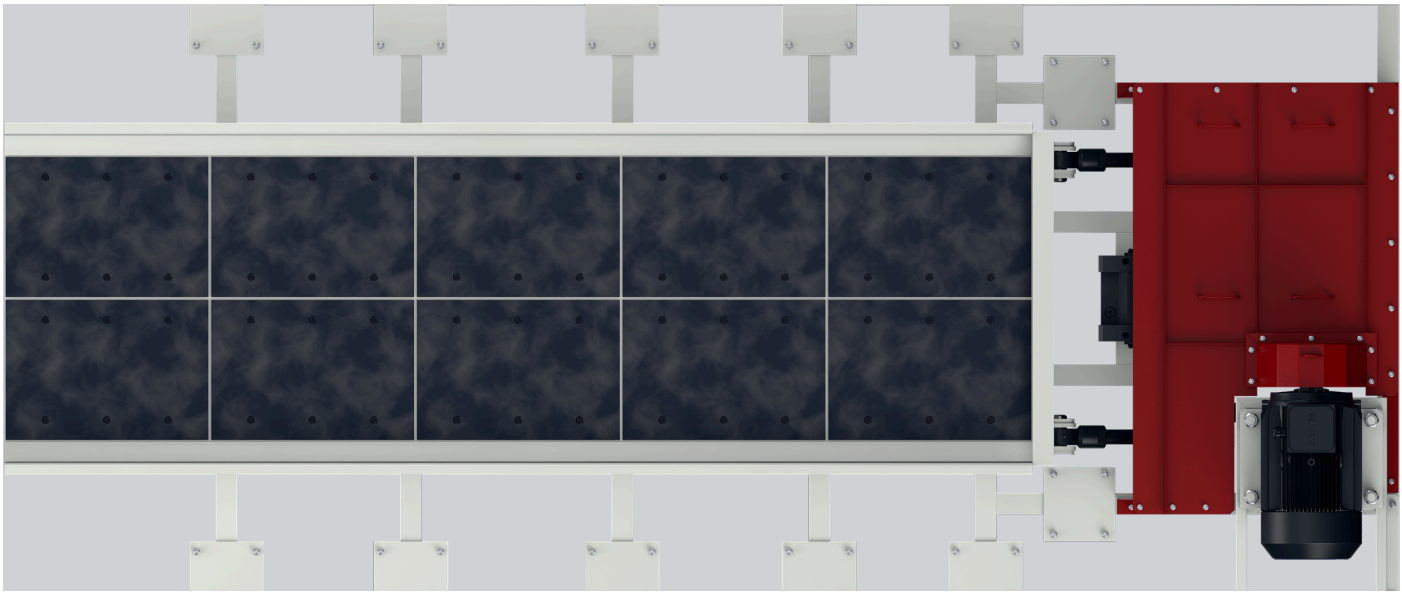

CHOOSE YOUR MODEL

SIZED TO THE BUNKER.

The RB1460 has a 1,400 × 6,000 mm plate. The bar spans its theoretical capacity at a bulk density of 1.6 t/m³; the note gives its size.



SETTING THE MACHINE

- Keep the bunker outlet and the gate free of oversized blocks that can bridge.
- Inspect the plate and its liners regularly; a worn plate moves less material per stroke.
- Check the drive, the pivots and the lubrication points on a schedule.

HOW TO CHOOSE

01 Start from the machine downstream: the tonnage the crusher, screen or conveyor needs.

02 Check the largest lump against the bunker outlet and the plate width.

03 Set the stroke rate to the machine downstream, not to the level in the bunker.

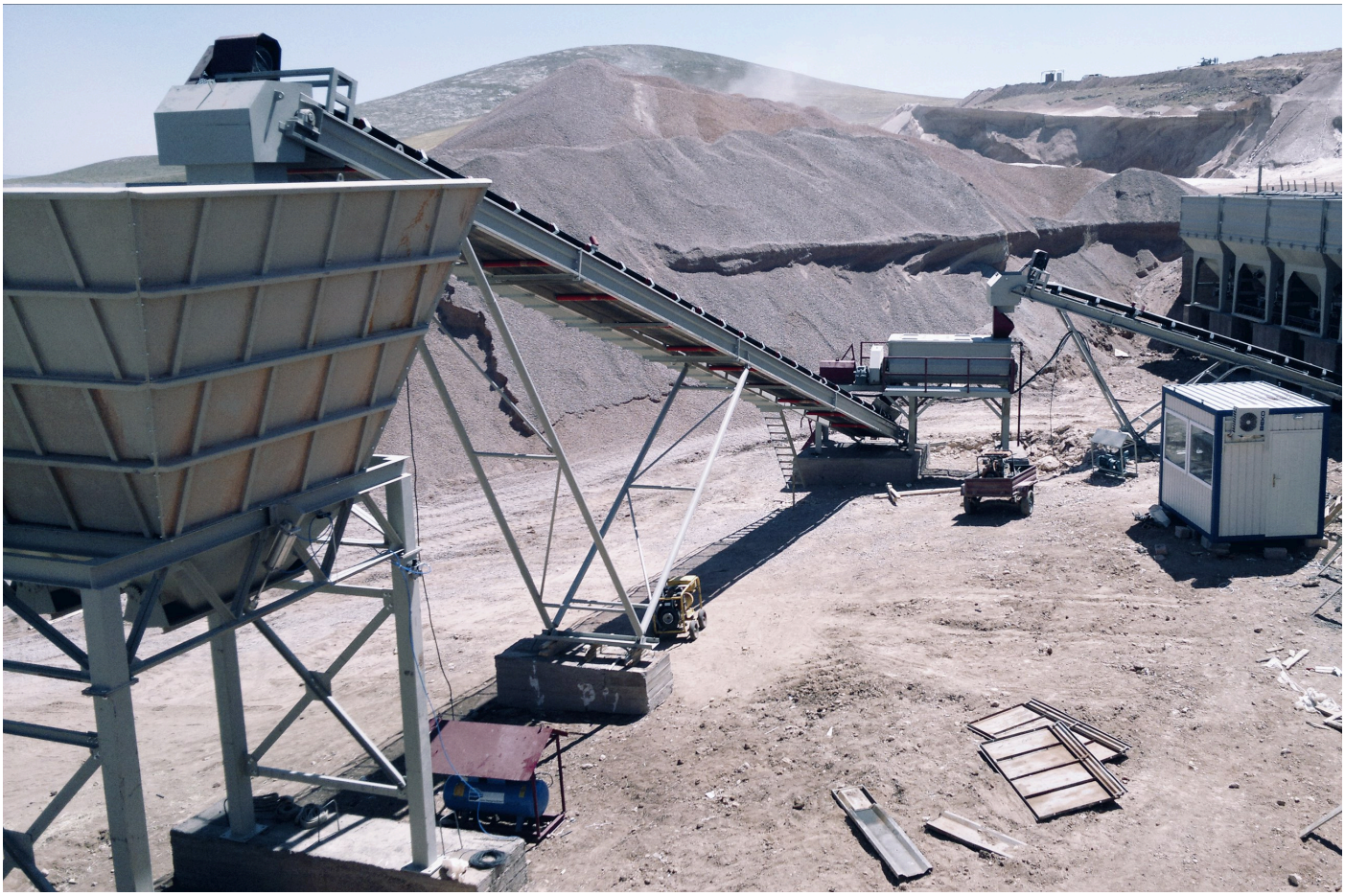

IN THE PLANT

WHERE IT WORKS.

The RB sits under a hopper or bunker, or in a reclaim tunnel under a stockpile, and meters the stored material onto a conveyor, into a crusher or onto a screen at the rate its stroke sets.

TYPICAL PLANT FLOW

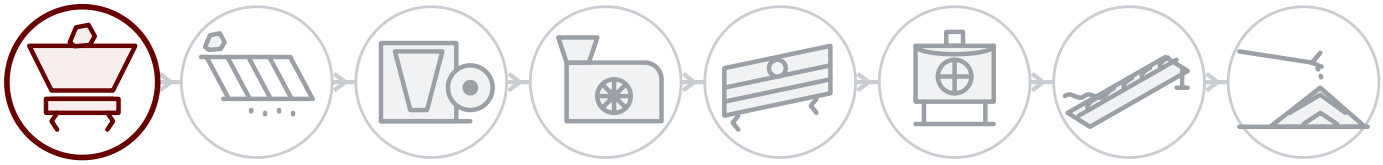

01 **Blast & feed**
02 Scalping
03 Primary crushing
04 Secondary crushing
05 Screening
06 Tertiary & sand
07 Washing
08 Stockpile & load-out

BEHIND EVERY MACHINE

Field service

Installation, commissioning and inspection by GELEN engineers, on site anywhere we sell.

Spares by serial number

Every machine has a serial and a QR on its nameplate. Scan it, and its parts list, manuals and service history open — and a spares order is one tap away.

Remote support

Production data, alarms and performance analytics from every connected plant, with support from the works.

CONTACT

TALK TO THE WORKS.

ASO 1. OSB, Oğuz Cd. No: 31
06930 Sincan, Ankara, Türkiye

PHONE	+90 312 267 06 20
E-MAIL	gelenmakina@gelenmakina.com
WEB	gelenmakina.com

SCAN FOR THE PRODUCT PAGE, CATALOGUE AND ENQUIRY FORM.

Full specifications, drawings and every other GELEN machine are in the Products Catalogue.

