GELEN

PRODUCT BROCHURE



MP SERIES

PUGMILL MIXING PLANTS

BASE COURSE, MIXED CONTINUOUSLY.

MP SERIES

EVERY RECIPE, ON EVERY TONNE.

MP plants mix base-course materials continuously in a twin-shaft pugmill. Feed bins with dosing belts proportion the aggregates automatically; two counter-rotating shafts with paddles, held in step by timing gears, mix them, and a spray bar adds the water. Two sizes, the MP350 and the MP500, in fixed and mobile versions.

2
MODELS IN THE SERIES

550 t/h
MAX. OUTPUT

97 kW
MAX. INSTALLED POWER

APPLICATIONS

WET MIX MACADAM (WMM) · GRANULAR SUBBASE (GSB) · CEMENT-TREATED BASE (CTB) · ROAD CONSTRUCTION · SOIL STABILISATION

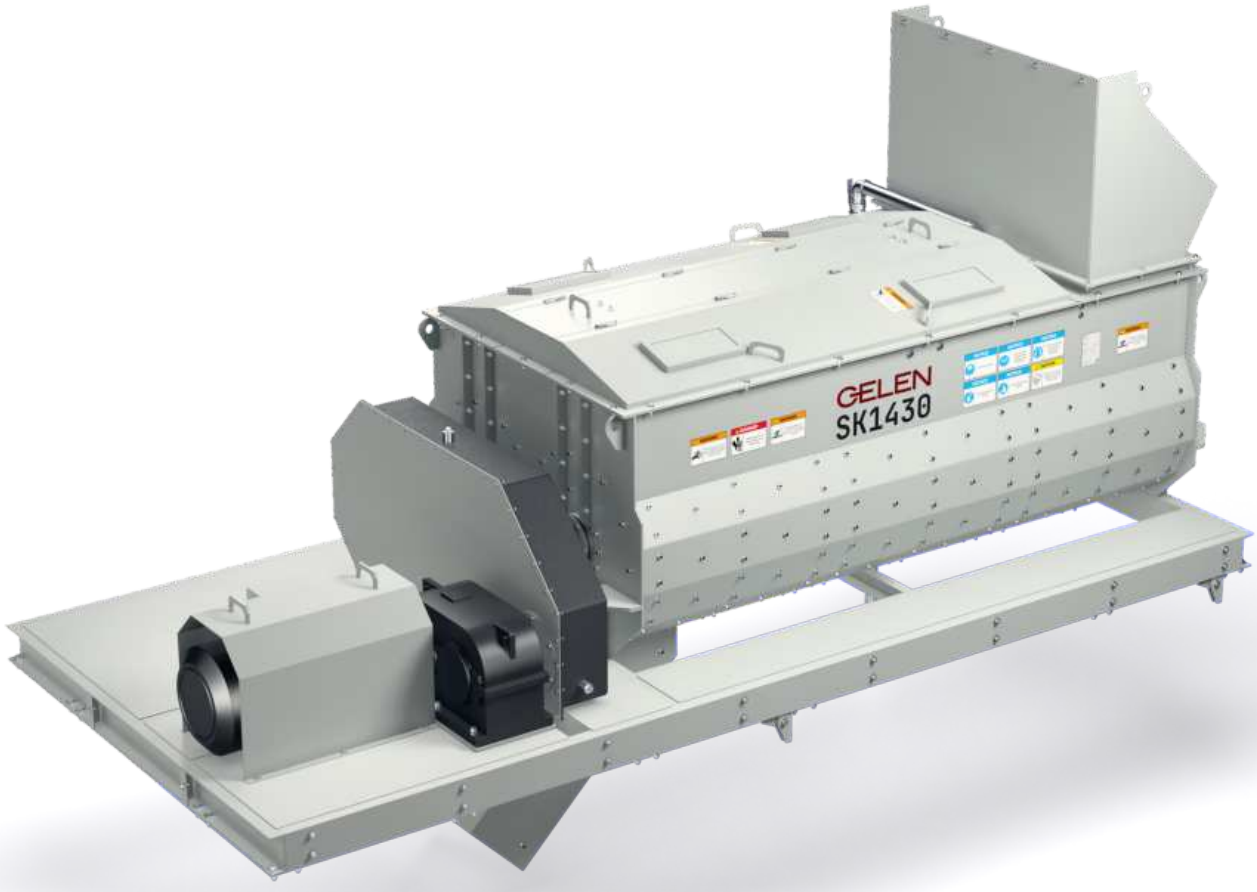

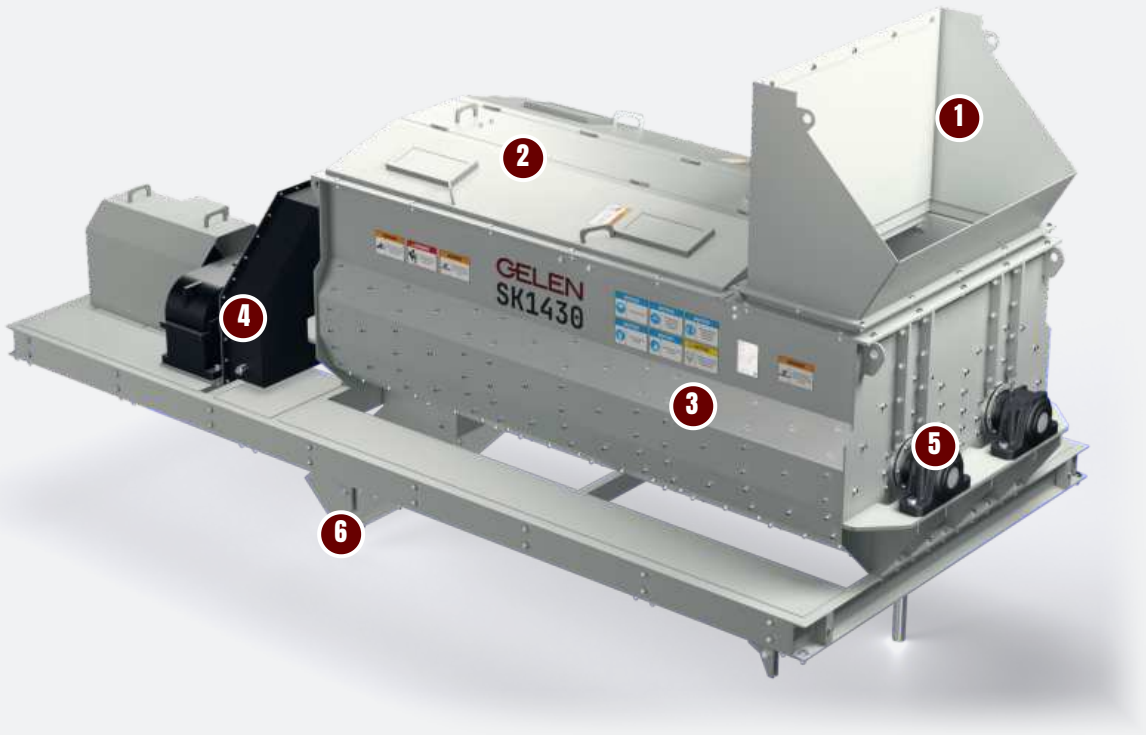

DESIGN

ANATOMY OF A PUGMILL.

Two paddle shafts turning toward each other in one trough knead the material as they carry it from the inlet to the discharge. Shown: the SK1430, the MP500's mixer.

1 Inlet hopper

The dosed aggregates, and cement where the mix needs it, enter the trough through the hopper.

2 Inspection covers

Hinged covers over the trough open for inspection and paddle changes.

3 Twin-shaft trough

Two counter-rotating shafts fitted with paddles mix the material, while a spray bar with nozzles adds the water.

4 Drive and timing gears

The motor and gear reducer turn the shafts; timing gears keep the two shafts in step at the mixing speed.

5 Shaft bearings

The paddle shafts turn in bearing housings outside the trough, away from the material.

6 Discharge

The mixed material leaves under the drive end, onto the conveyor to the silo.

Consistent mixes

- Twin counter-rotating paddle shafts
- Timing gears for the right mixing speed
- Spray bar with nozzles for even moisture
- Automatic proportioning of the aggregates

Precise feeding

- At least three feed bins with dosing belts
- Optional cement feeding
- Base-course silo at the discharge
- Recipes for WMM, GSB and CTB, among others

In view, in control

- Real-time monitoring of motor loads
- Blending rates and individual feed rates on screen
- Fixed and mobile configurations
- Two sizes, 300 to 550 t/h





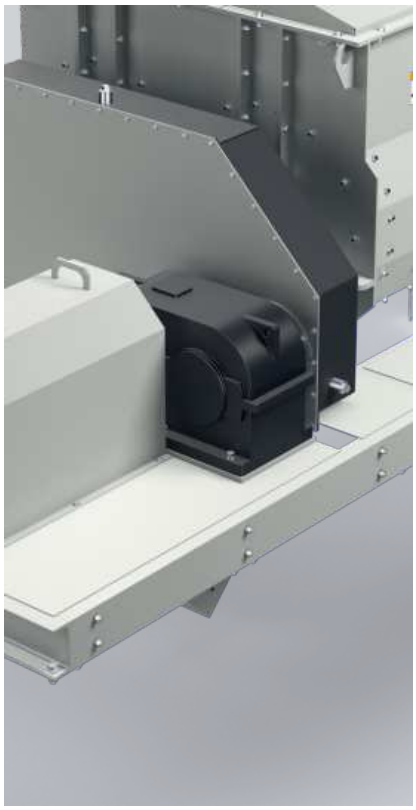

SPECIFICATIONS

PUGMILL MIXING PLANTS - MP SERIES

MODEL	METERING FEED HOPPERS m^3	CONTINUOUS MIXER TYPE	BASE COURSE SILO m^3	OUTPUT mtph	TOTAL INSTALLED POWER kW
MP500	4x20	SK1430	40	450 - 550	97
MP350	4x15	SK1226	25	300 - 400	80

Values are nominal and depend on feed material, gradation and moisture. Metric units; an imperial edition of this brochure is available on request.



CHOOSE YOUR MODEL

ONE SERIES. THE WHOLE RANGE.

Two plants: the MP350 with an SK1226 mixer and the MP500 with an SK1430. Each bar runs from a plant's lowest output to its highest.



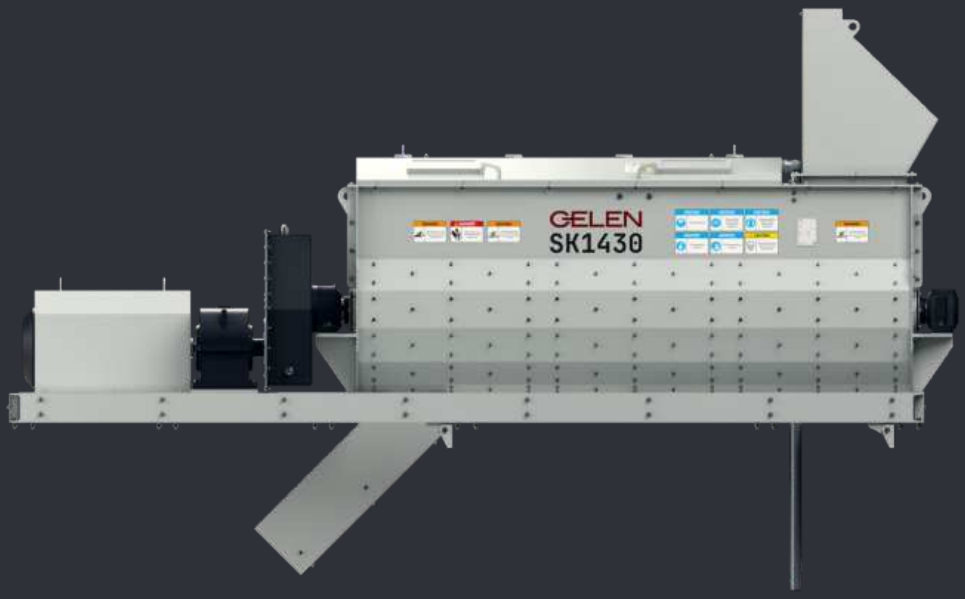

SETTING THE MACHINE

- Calibrate the dosing belts before production, and after any change of material.
- Watch the mix moisture and adjust the spray bar, not the feed rates.
- Inspect the paddles and liners on a schedule; worn paddles mix less.
- Keep the timing gears lubricated and the shafts in step.

HOW TO CHOOSE

01 Start from the job: tonnage per hour, the mixes and the number of aggregates.

02 Choose the plant for the tonnage, then the bins for the recipe.

03 GELEN engineering sizes the bins, the mixer and the silo together, for your site.



IN THE PLANT

WHERE IT WORKS.

An MP plant works off the stockpiles of a crushing plant. Loaders fill the feed bins, the dosing belts proportion the aggregates onto the collecting conveyor, and the pugmill delivers the mix to the silo for the trucks.

BEHIND EVERY MACHINE

Field service

Installation, commissioning and inspection by GELEN engineers, on site anywhere we sell.

Spares by serial number

Every machine has a serial and a QR on its nameplate. Scan it, and its parts list, manuals and service history open — and a spares order is one tap away.

Remote support

Production data, alarms and performance analytics from every connected plant, with support from the works.

CONTACT

TALK TO THE WORKS.

ASO 1. OSB, Oğuz Cd. No: 31
06930 Sincan, Ankara, Türkiye

PHONE	+90 312 267 06 20
E-MAIL	gelenmakina@gelenmakina.com
WEB	gelenmakina.com

SCAN FOR THE PRODUCT PAGE, CATALOGUE AND ENQUIRY FORM.

Full specifications, drawings and every other GELEN machine are in the Products Catalogue.

