GELEN

PRODUCT BROCHURE



MP SERIES

# PUGMILL MIXING PLANTS

BASE COURSE, MIXED CONTINUOUSLY.

MP SERIES

# EVERY RECIPE, ON EVERY TONNE.

MP plants mix base-course materials continuously in a twin-shaft pugmill. Feed bins with dosing belts proportion the aggregates automatically; two counter-rotating shafts with paddles, held in step by timing gears, mix them, and a spray bar adds the water. Two sizes, the MP350 and the MP500, in fixed and mobile versions.

**2**
MODELS IN THE SERIES

**606 stph**
MAX. OUTPUT

**130 hp**
MAX. INSTALLED POWER

APPLICATIONS

WET MIX MACADAM (WMM) · GRANULAR SUBBASE (GSB) · CEMENT-TREATED BASE (CTB) · ROAD CONSTRUCTION · SOIL STABILISATION

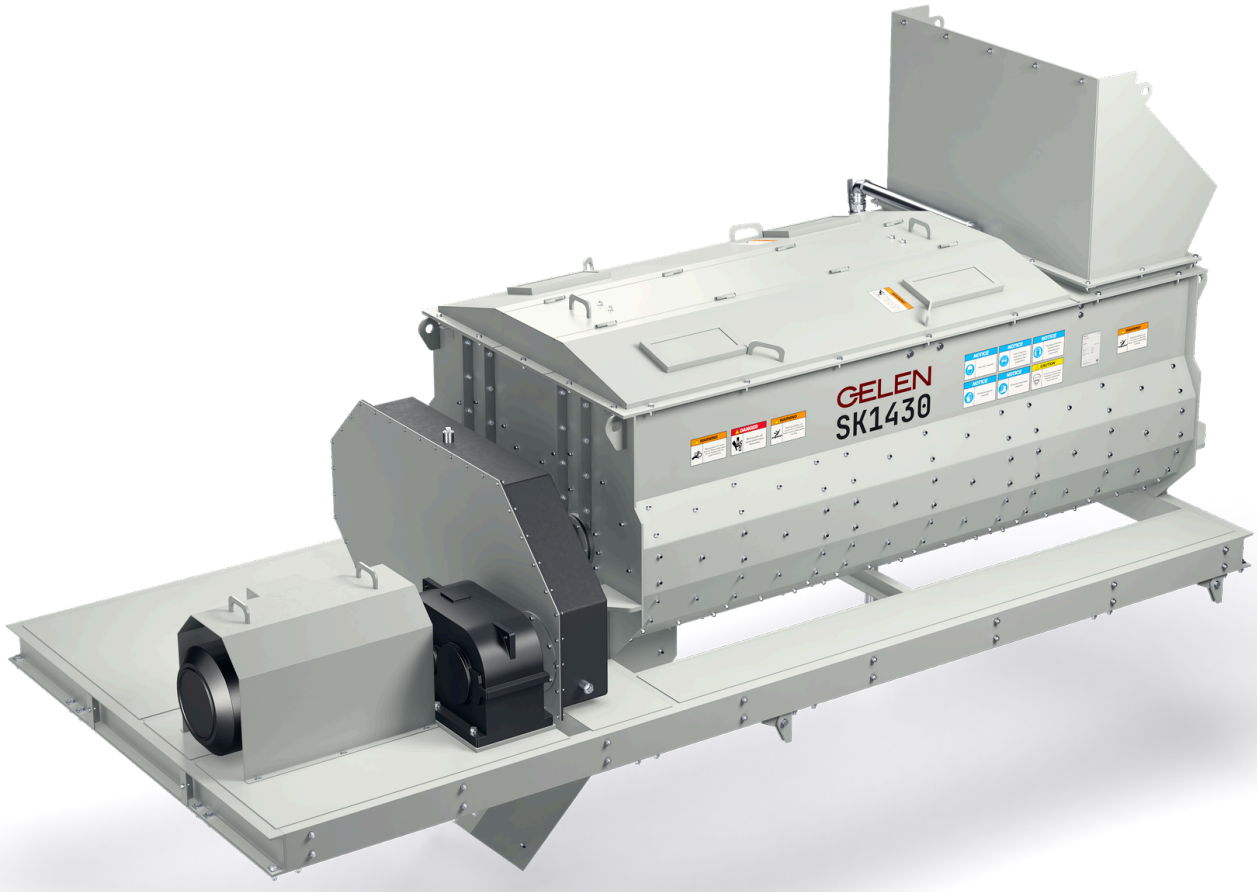

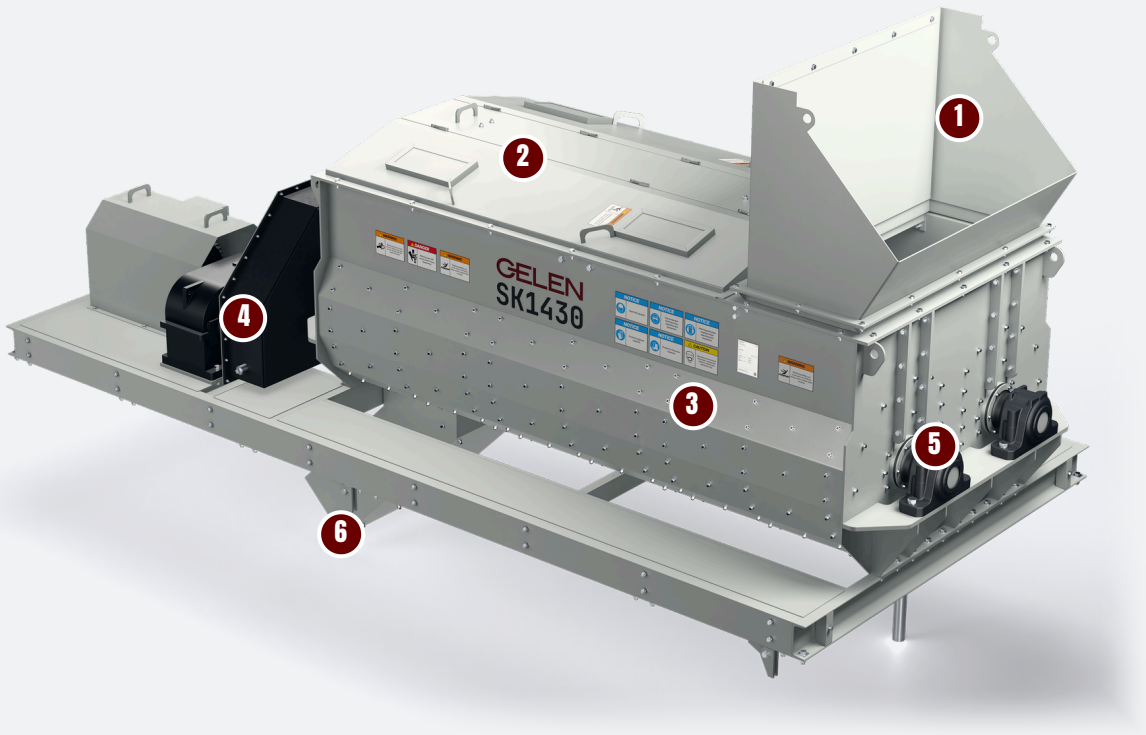


DESIGN

# ANATOMY OF A PUGMILL.

Two paddle shafts turning toward each other in one trough knead the material as they carry it from the inlet to the discharge. Shown: the SK1430, the MP500's mixer.

**1** Inlet hopper

The dosed aggregates, and cement where the mix needs it, enter the trough through the hopper.

**2** Inspection covers

Hinged covers over the trough open for inspection and paddle changes.

**3** Twin-shaft trough

Two counter-rotating shafts fitted with paddles mix the material, while a spray bar with nozzles adds the water.

**4** Drive and timing gears

The motor and gear reducer turn the shafts; timing gears keep the two shafts in step at the mixing speed.

**5** Shaft bearings

The paddle shafts turn in bearing housings outside the trough, away from the material.

**6** Discharge

The mixed material leaves under the drive end, onto the conveyor to the silo.

## Consistent mixes

- Twin counter-rotating paddle shafts
- Timing gears for the right mixing speed
- Spray bar with nozzles for even moisture
- Automatic proportioning of the aggregates

## Precise feeding

- At least three feed bins with dosing belts
- Optional cement feeding
- Base-course silo at the discharge
- Recipes for WMM, GSB and CTB, among others

## In view, in control

- Real-time monitoring of motor loads
- Blending rates and individual feed rates on screen
- Fixed and mobile configurations
- Two sizes, 300 to 550 t/h






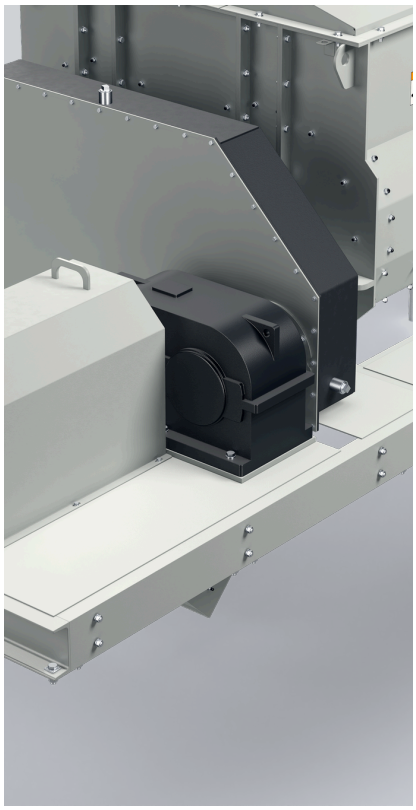

SPECIFICATIONS

# PUGMILL MIXING PLANTS - MP SERIES

| MODEL | METERING FEED HOPPERS cu.yd | CONTINUOUS MIXER TYPE | BASE COURSE SILO cu.yd | OUTPUT stph | TOTAL INSTALLED POWER hp |
|---|---|---|---|---|---|
| MP500 | 4x26.2 | SK1430 | 52.3 | 496 - 606 | 130 |
| MP350 | 4x19.6 | SK1226 | 32.7 | 331 - 441 | 107 |

Values are nominal and depend on feed material, gradation and moisture. Imperial units converted from the metric originals; a metric edition of this brochure is available on request.

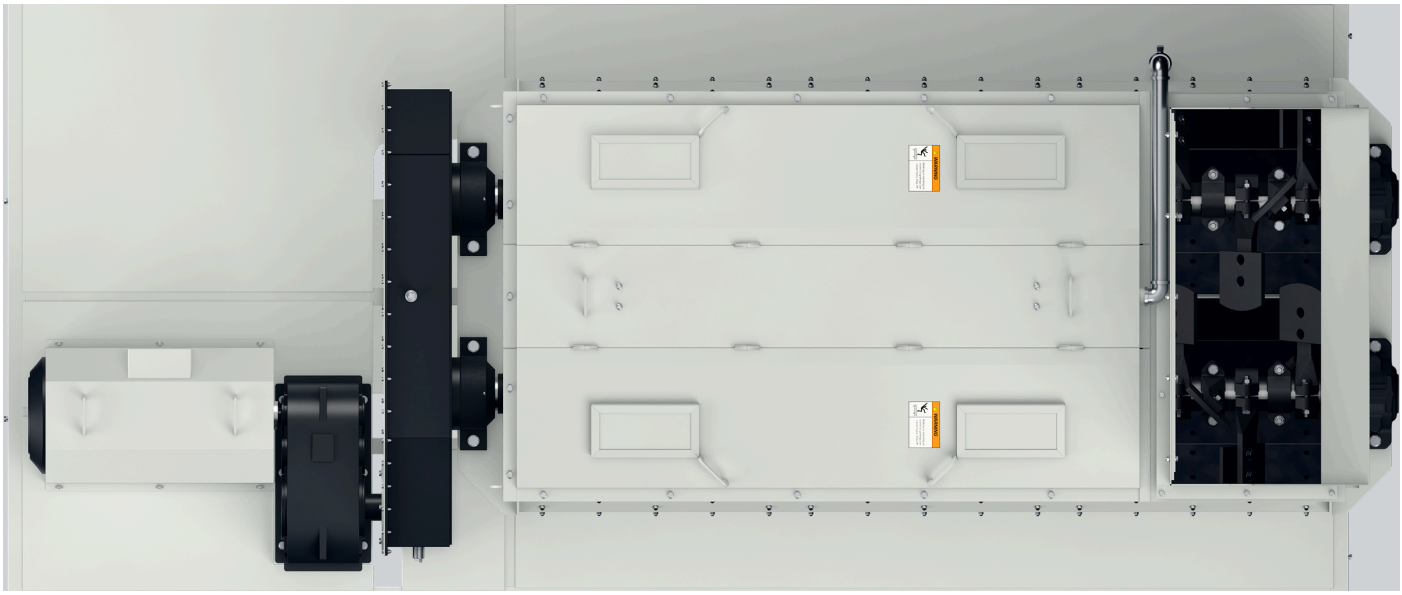

CHOOSE YOUR MODEL

# ONE SERIES. THE WHOLE RANGE.

Two plants: the MP350 with an SK1226 mixer and the MP500 with an SK1430. Each bar runs from a plant's lowest output to its highest.

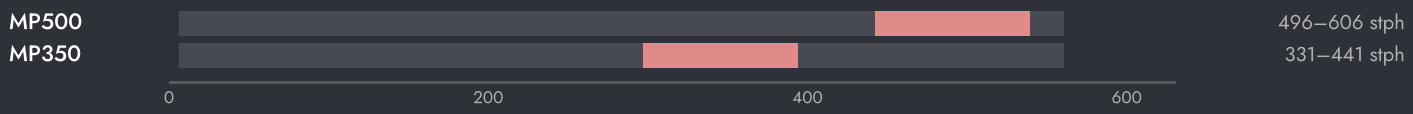


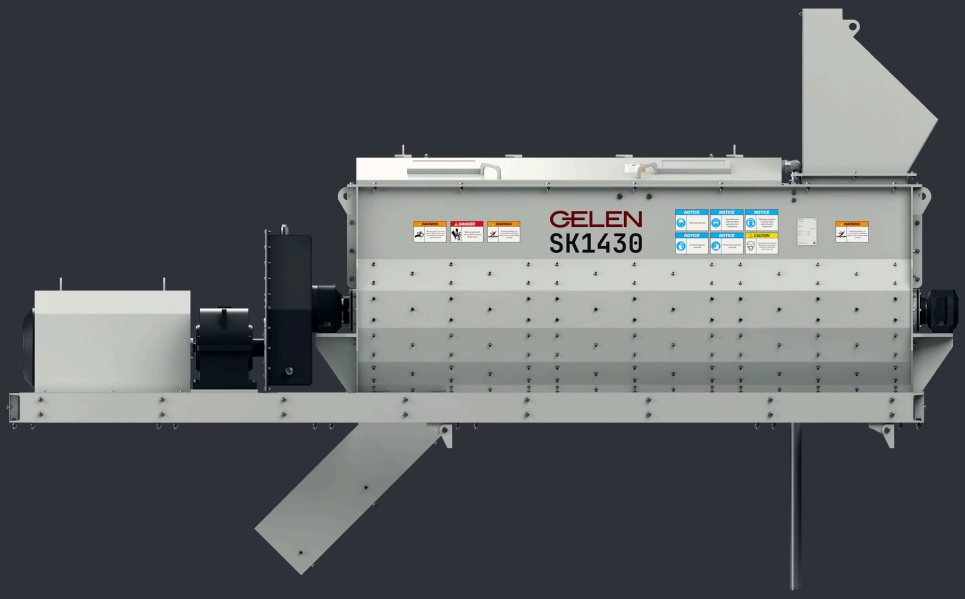


## SETTING THE MACHINE

- Calibrate the dosing belts before production, and after any change of material.
- Watch the mix moisture and adjust the spray bar, not the feed rates.
- Inspect the paddles and liners on a schedule; worn paddles mix less.
- Keep the timing gears lubricated and the shafts in step.

## HOW TO CHOOSE

**01** Start from the job: tonnage per hour, the mixes and the number of aggregates.

**02** Choose the plant for the tonnage, then the bins for the recipe.

**03** GELEN engineering sizes the bins, the mixer and the silo together, for your site.



IN THE PLANT

# WHERE IT WORKS.

An MP plant works off the stockpiles of a crushing plant. Loaders fill the feed bins, the dosing belts proportion the aggregates onto the collecting conveyor, and the pugmill delivers the mix to the silo for the trucks.

BEHIND EVERY MACHINE

### Field service

Installation, commissioning and inspection by GELEN engineers, on site anywhere we sell.

### Spares by serial number

Every machine has a serial and a QR on its nameplate. Scan it, and its parts list, manuals and service history open — and a spares order is one tap away.

### Remote support

Production data, alarms and performance analytics from every connected plant, with support from the works.

CONTACT

# TALK TO THE WORKS.


ASO 1. OSB, Oğuz Cd. No: 31
06930 Sincan, Ankara, Türkiye

| | |
|---|---|
| PHONE | +90 312 267 06 20 |
| E-MAIL | gelenmakina@gelenmakina.com |
| WEB | gelenmakina.com |


SCAN FOR THE PRODUCT PAGE, CATALOGUE AND ENQUIRY FORM.

Full specifications, drawings and every other GELEN machine are in the Products Catalogue.

