GELEN

PRODUCT BROCHURE



CK SERIES

JAW CRUSHERS

BUILT FOR THE FIRST BITE.

CK SERIES

CUTTING-EDGE CRUSHERS WITH HIGH PERFORMANCE AND LOW OPERATING COST.

The CK series takes run-of-mine rock straight from the blast — up to a metre across — and turns it into a steady, sized feed for everything downstream. Twelve models from 30 to 250 kW, primary and secondary, all built on the same principle: a heavy cast pitman, a stress-relieved frame, and a chamber geometry that pulls rock in instead of letting it bounce.

12
MODELS IN THE SERIES

1,080 mm
MAX. FEED SIZE

1,000 t/h
MAX. OUTPUT

250 kW
MAX. INSTALLED POWER

APPLICATIONS

QUARRIES · ORE MINING · RECYCLING · RIVER GRAVEL · INDUSTRIAL MINERALS



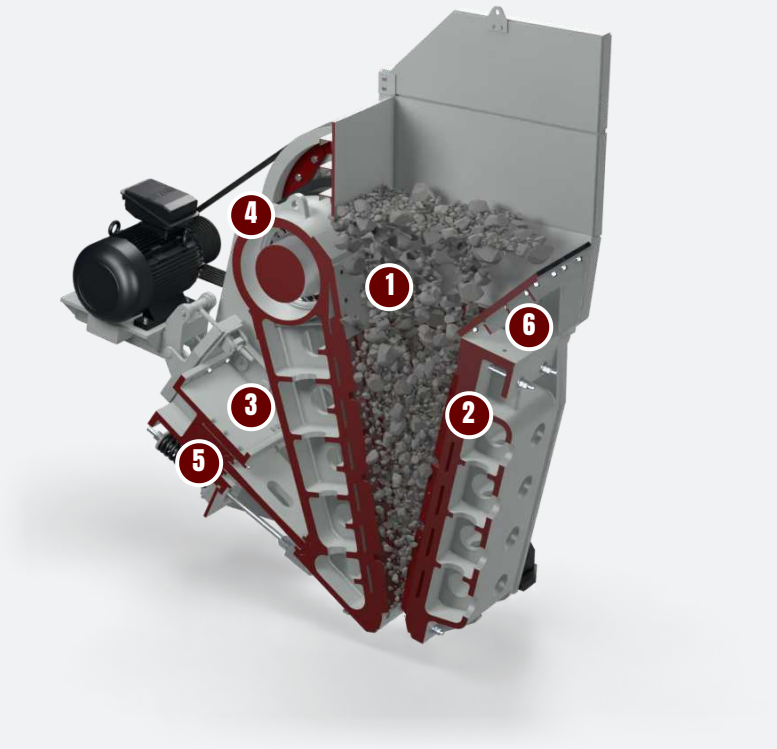

DESIGN

ANATOMY OF A CK.

Every part that takes the crushing load is cast, machined and stress-relieved at the works in Ankara. The parts that wear are the only ones you ever replace.

1 Deep, symmetrical chamber

A long jaw and steep nip angle grip large feed and keep it moving, for higher capacity at the same setting.

2 Reversible manganese jaw plates

High-manganese alloy plates, reversible end for end to double their service life. Bolted cheek plates on the sides swap in minutes.

3 Cast-steel pitman

Designed for maximum strength at minimum weight, on a robust eccentric shaft with a high swing.

4 Large balanced flywheels

Dynamically balanced, two-piece design — steel hub, cast-iron rim — to store energy through the hardest rock.

5 Wedge setting adjustment

Mechanical as standard, hydraulic as an option. Change the closed-side setting without dismantling the toggle.

6 Stress-relieved main frame

Welded, pin-reinforced and heat-treated as one piece. One-piece cast bearing housings carry four equal-size spherical roller bearings.

High durability

- Cast-steel pitman designed for maximum strength with minimum weight
- Stress-relieved main frame
- Cast-steel bearing housings with four equal-size premium spherical roller bearings
- Optimum toggle-plate angle for higher performance and safety

High performance

- Symmetrical crushing chamber with a long jaw and steep nip angle
- Large, dynamically balanced flywheels
- Robust eccentric shaft design with high swing
- Designed to crush very hard rock

Low operating cost

- Reversible high-manganese jaw plates
- Easily replaceable bolted cheek plates
- Manual or hydraulic wedge setting
- Optional central lubrication; rubber dampers between crusher and structure





FROM THE MANUAL

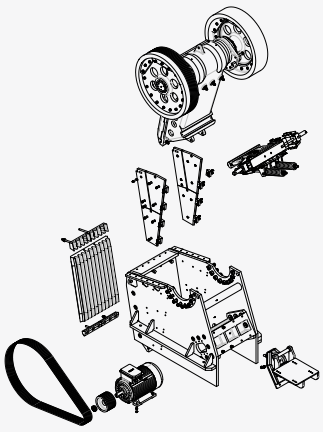

CK1185 general arrangement — drive, pitman, toggle and setting assembly.

SPECIFICATIONS

JAW CRUSHERS - CK SERIES

MODEL	INLET OPENING mm	MAX. FEED SIZE mm	OUTLET SETTING mm	OUTPUT mtph	POWER kW	WEIGHT kg
CK SERIES PRIMARY JAW CRUSHERS						
CK638	600x380	340	40 - 150	25 - 120	30	6,300
CK855	800x550	490	50 - 170	75 - 250	55	9,800
CK965	900x650	580	60 - 170	80 - 260	75	13,400
CK1075	1000x750	680	70 - 200	150 - 420	110	21,000
CK1185	1100x850	760	75 - 200	180 - 460	132	33,000
CK1395	1250x950	850	100 - 250	270 - 645	160	43,000
CK1411	1400x1100	990	125 - 275	400 - 850	200	54,500
CK1612	1600x1200	1080	150 - 300	500 - 1000	250	74,200
CK3055	1400x750	680	75 - 200	240 - 600	160	31,000
SECONDARY JAW CRUSHERS						
CK920	900x200	180	30 - 90	20 - 75	30	5,600
CK1338	1300x380	340	50 - 125	40 - 120	55	16,900
CK1465	1400x650	540	75 - 175	200 - 550	132	29,900

Values are nominal and depend on feed material, gradation and moisture. Metric units; an imperial edition of this brochure is available on request.

PRODUCT GRADATION

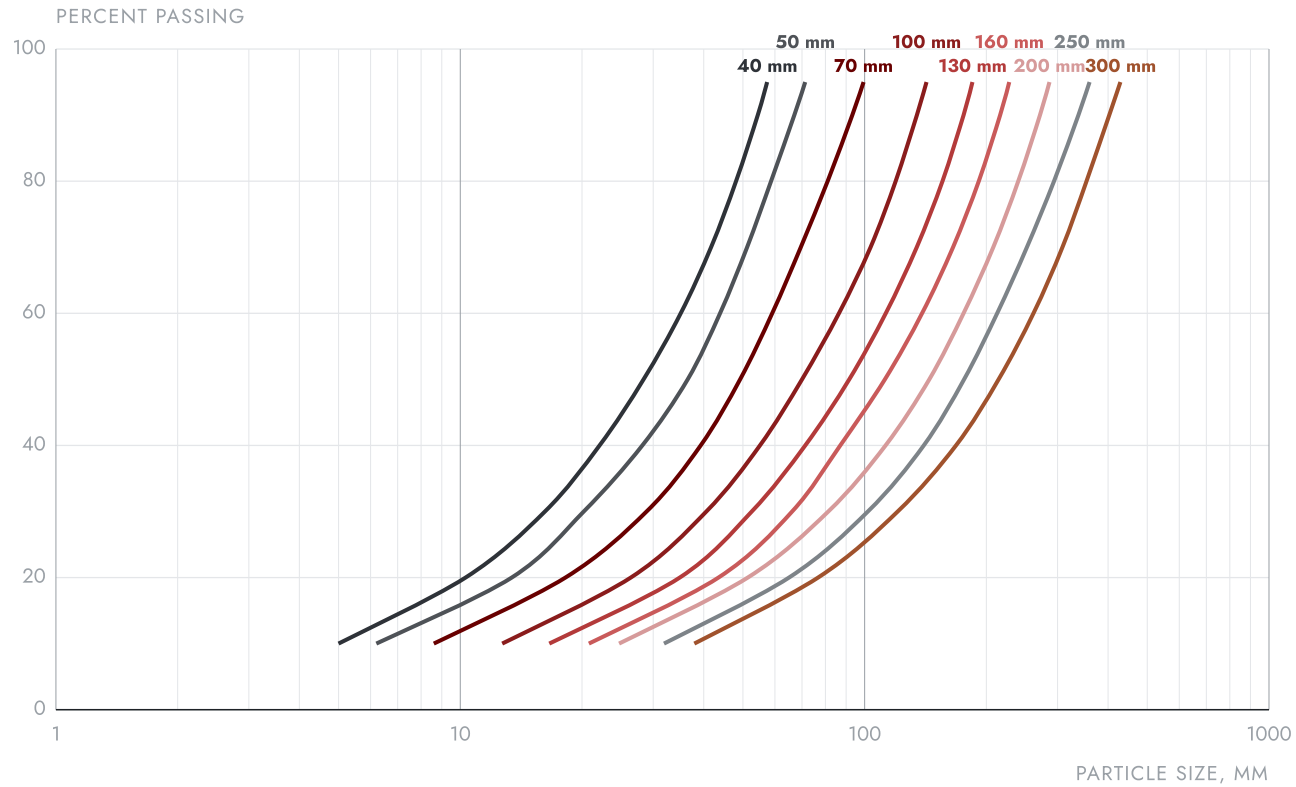

Technical graphs are for information only. Values are nominal and vary with feed material, gradation, moisture and operating conditions. Consult GELEN for your application.

CHOOSE YOUR MODEL

ONE SERIES. THE WHOLE RANGE.

Primary models from the CK638 for a small quarry to the CK1612 that takes a 1,080 mm feed at 1,000 t/h. Three secondary models with narrow, long chambers for a fine, cubical product at the second stage.

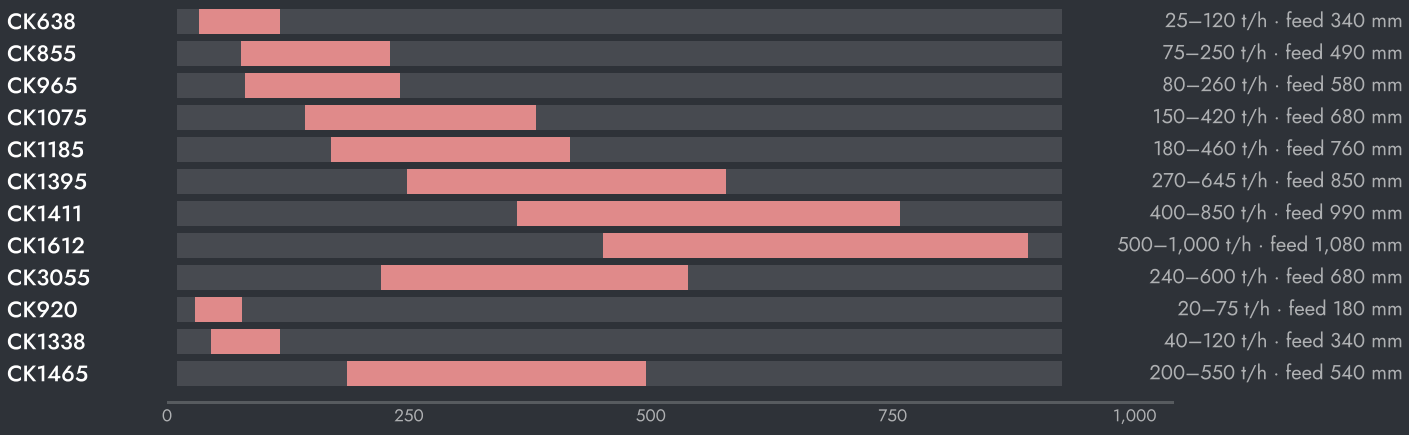

CAPACITY BY OUTLET SETTING

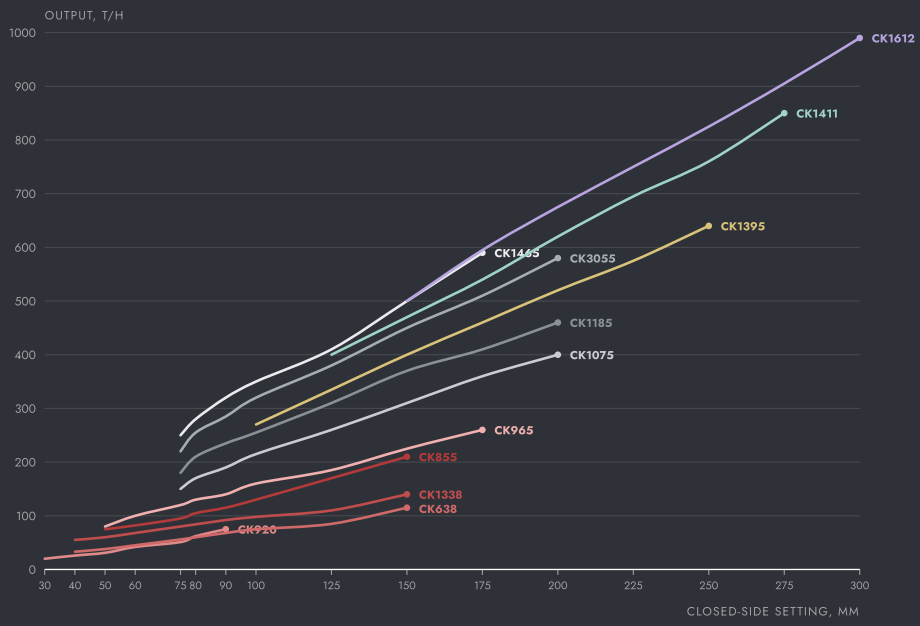

Technical graphs are for information only. Values are nominal and vary with feed material, gradation, moisture and operating conditions. Consult GELEN for your application.

HOW TO CHOOSE

01 Start from the largest lump in the feed: the inlet opening should be about 1.25 times its size.

02 Choose the closed-side setting for the product you need; capacity follows from the curve at that setting.

03 Secondary models take a pre-crushed feed and give a finer, more cubical product.



IN THE PLANT

WHERE IT WORKS.

A CK sits right after the grizzly feeder: it takes the oversize the grizzly rejects and feeds the secondary stage. On a wheeled chassis, with feeder and conveyor, the same machine is a complete primary station that moves between sites.

TYPICAL PLANT FLOW

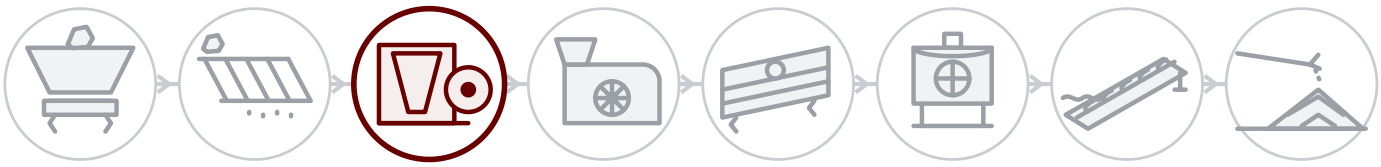

01 Blast & feed
02 Scalping
03 Primary crushing
04 Secondary crushing
05 Screening
06 Tertiary & sand
07 Washing
08 Stockpile & load-out

BEHIND EVERY MACHINE

Field service

Installation, commissioning and inspection by GELEN engineers, on site anywhere we sell.

Spares by serial number

Every machine has a serial and a QR on its nameplate. Scan it, and its parts list, manuals and service history open — and a spares order is one tap away.

Remote support

Production data, alarms and performance analytics from every connected plant, with support from the works.

CONTACT

TALK TO THE WORKS.

ASO 1. OSB, Oğuz Cd. No: 31
06930 Sincan, Ankara, Türkiye

PHONE	+90 312 267 06 20
E-MAIL	gelenmakina@gelenmakina.com
WEB	gelenmakina.com

SCAN FOR THE PRODUCT PAGE, CATALOGUE AND ENQUIRY FORM.

Full specifications, drawings and every other GELEN machine are in the Products Catalogue.

