GELEN

PRODUCT BROCHURE



CK SERIES

JAW CRUSHERS

BUILT FOR THE FIRST BITE.

CK SERIES

CUTTING-EDGE CRUSHERS WITH HIGH PERFORMANCE AND LOW OPERATING COST.

The CK series takes run-of-mine rock straight from the blast — up to a metre across — and turns it into a steady, sized feed for everything downstream. Twelve models from 30 to 250 kW, primary and secondary, all built on the same principle: a heavy cast pitman, a stress-relieved frame, and a chamber geometry that pulls rock in instead of letting it bounce.

12
MODELS IN THE SERIES

42.5 in
MAX. FEED SIZE

1,102 stph
MAX. OUTPUT

335 hp
MAX. INSTALLED POWER



APPLICATIONS

QUARRIES · ORE MINING · RECYCLING · RIVER GRAVEL · INDUSTRIAL MINERALS

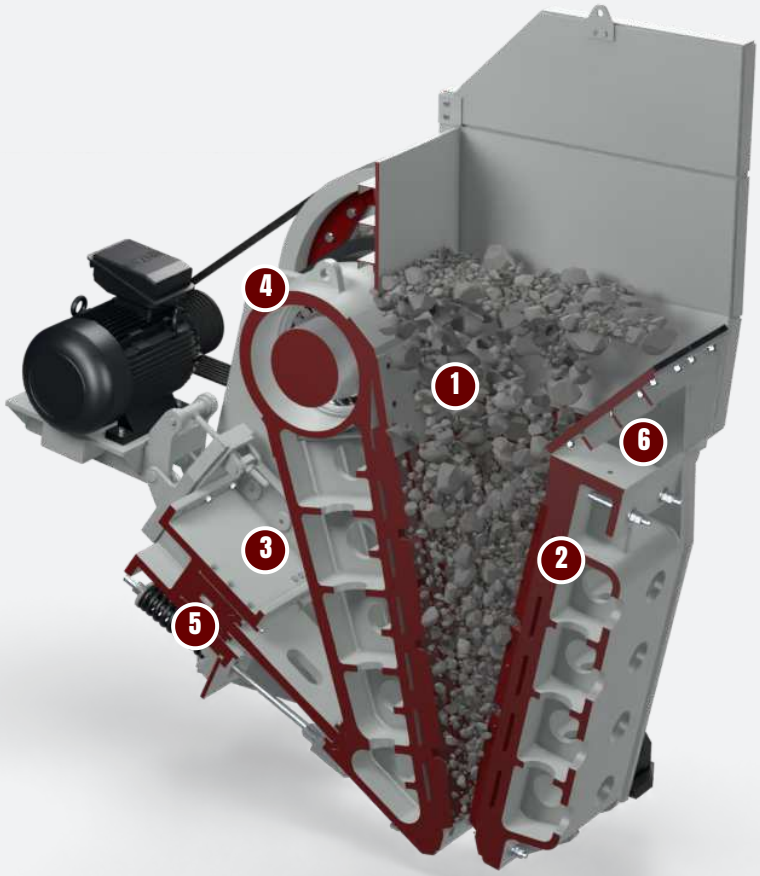

DESIGN

ANATOMY OF A CK.

Every part that takes the crushing load is cast, machined and stress-relieved at the works in Ankara. The parts that wear are the only ones you ever replace.

1 Deep, symmetrical chamber

A long jaw and steep nip angle grip large feed and keep it moving, for higher capacity at the same setting.

2 Reversible manganese jaw plates

High-manganese alloy plates, reversible end for end to double their service life. Bolted cheek plates on the sides swap in minutes.

3 Cast-steel pitman

Designed for maximum strength at minimum weight, on a robust eccentric shaft with a high swing.

4 Large balanced flywheels

Dynamically balanced, two-piece design — steel hub, cast-iron rim — to store energy through the hardest rock.

5 Wedge setting adjustment

Mechanical as standard, hydraulic as an option. Change the closed-side setting without dismantling the toggle.

6 Stress-relieved main frame

Welded, pin-reinforced and heat-treated as one piece. One-piece cast bearing housings carry four equal-size spherical roller bearings.

High durability

- Cast-steel pitman designed for maximum strength with minimum weight
- Stress-relieved main frame
- Cast-steel bearing housings with four equal-size premium spherical roller bearings
- Optimum toggle-plate angle for higher performance and safety

High performance

- Symmetrical crushing chamber with a long jaw and steep nip angle
- Large, dynamically balanced flywheels
- Robust eccentric shaft design with high swing
- Designed to crush very hard rock

Low operating cost

- Reversible high-manganese jaw plates
- Easily replaceable bolted cheek plates
- Manual or hydraulic wedge setting
- Optional central lubrication; rubber dampers between crusher and structure





FROM THE MANUAL

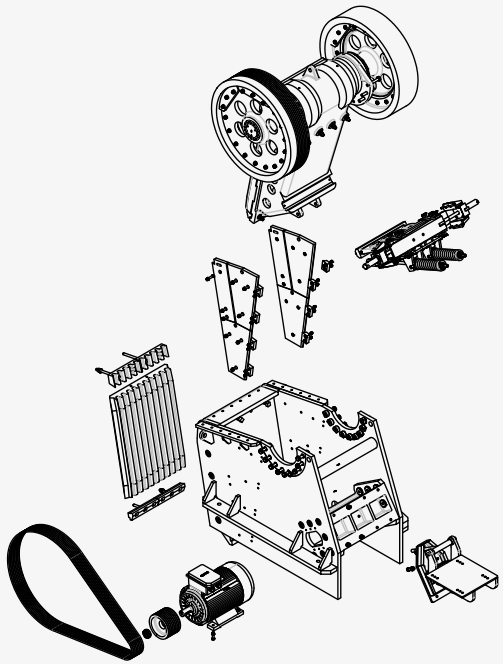

CK1185 general arrangement — drive, pitman, toggle and setting assembly.

SPECIFICATIONS

JAW CRUSHERS - CK SERIES

MODEL	INLET OPENING in	MAX. FEED SIZE in	OUTLET SETTING in	OUTPUT stph	POWER hp	WEIGHT lb
CK SERIES PRIMARY JAW CRUSHERS						
CK638	23.6x15.0	13.4	1.6 - 5.9	28 - 132	40	13,889
CK855	31.5x21.7	19.3	2.0 - 6.7	83 - 276	74	21,605
CK965	35.4x25.6	22.8	2.4 - 6.7	88 - 287	101	29,542
CK1075	39.4x29.5	26.8	2.8 - 7.9	165 - 463	148	46,297
CK1185	43.3x33.5	29.9	3.0 - 7.9	198 - 507	177	72,752
CK1395	49.2x37.4	33.5	3.9 - 9.8	298 - 711	215	94,799
CK1411	55.1x43.3	39.0	4.9 - 10.8	441 - 937	268	120,152
CK1612	63.0x47.2	42.5	5.9 - 11.8	551 - 1,102	335	163,583
CK3055	55.1x29.5	26.8	3.0 - 7.9	265 - 661	215	68,343
SECONDARY JAW CRUSHERS						
CK920	35.4x7.9	7.1	1.2 - 3.5	22 - 83	40	12,346
CK1338	51.2x15.0	13.4	2.0 - 4.9	44 - 132	74	37,258
CK1465	55.1x25.6	21.3	3.0 - 6.9	220 - 606	177	65,918

Values are nominal and depend on feed material, gradation and moisture. Imperial units converted from the metric originals; a metric edition of this brochure is available on request.

PRODUCT GRADATION

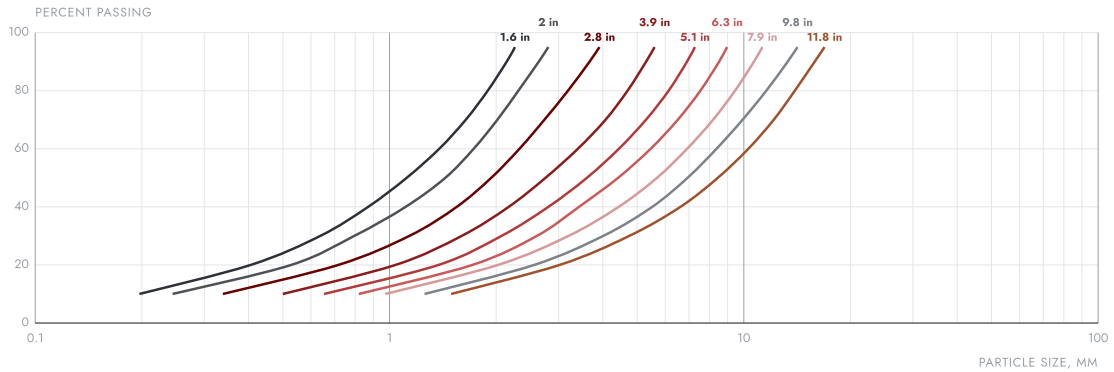

Technical graphs are for information only. Values are nominal and vary with feed material, gradation, moisture and operating conditions. Consult GELEN for your application.

CHOOSE YOUR MODEL

ONE SERIES. THE WHOLE RANGE.

Primary models from the CK638 for a small quarry to the CK1612 that takes a 1,080 mm feed at 1,000 t/h. Three secondary models with narrow, long chambers for a fine, cubical product at the second stage.

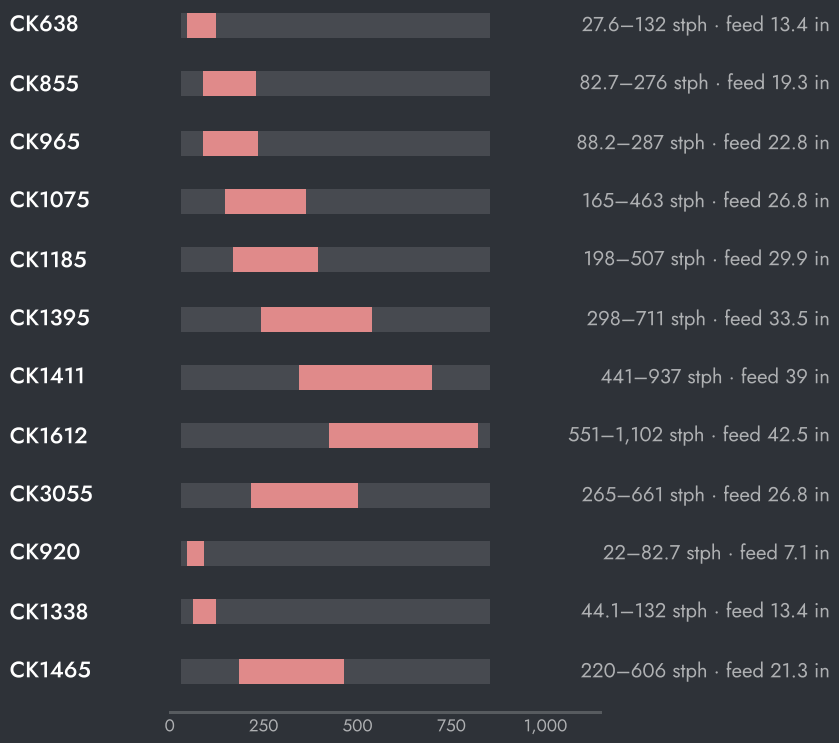

CAPACITY BY OUTLET SETTING

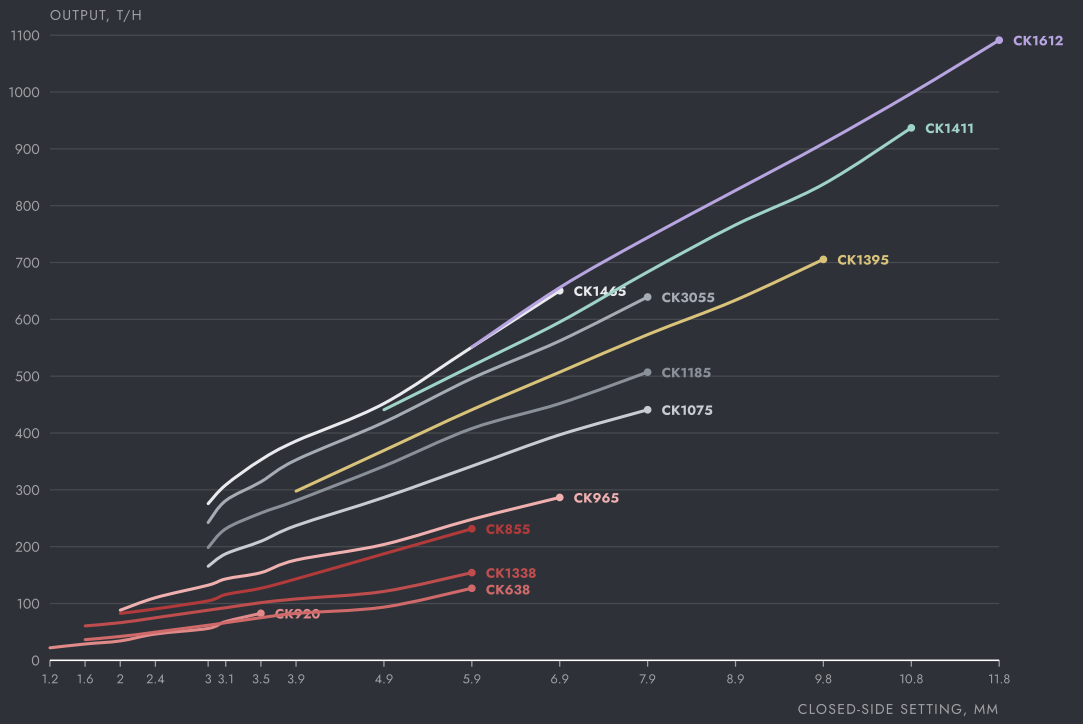

Technical graphs are for information only. Values are nominal and vary with feed material, gradation, moisture and operating conditions. Consult GELEN for your application.

HOW TO CHOOSE

01 Start from the largest lump in the feed: the inlet opening should be about 1.25 times its size.

02 Choose the closed-side setting for the product you need; capacity follows from the curve at that setting.

03 Secondary models take a pre-crushed feed and give a finer, more cubical product.



IN THE PLANT

WHERE IT WORKS.

A CK sits right after the grizzly feeder: it takes the oversize the grizzly rejects and feeds the secondary stage. On a wheeled chassis, with feeder and conveyor, the same machine is a complete primary station that moves between sites.

TYPICAL PLANT FLOW

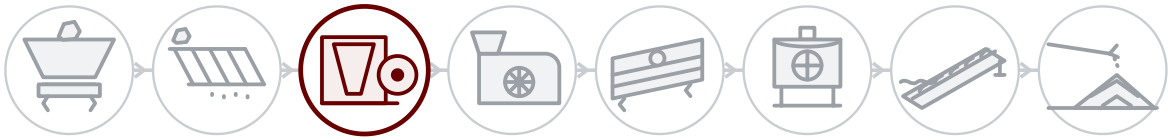

BEHIND EVERY MACHINE

Field service

Installation, commissioning and inspection by GELEN engineers, on site anywhere we sell.

Spares by serial number

Every machine has a serial and a QR on its nameplate. Scan it, and its parts list, manuals and service history open — and a spares order is one tap away.

Remote support

Production data, alarms and performance analytics from every connected plant, with support from the works.

CONTACT

TALK TO THE WORKS.

ASO 1. OSB, Oğuz Cd. No: 31
06930 Sincan, Ankara, Türkiye

PHONE	+90 312 267 06 20
E-MAIL	gelenmakina@gelenmakina.com
WEB	gelenmakina.com

Full specifications, drawings and every other GELEN machine are in the Products Catalogue.

SCAN FOR THE PRODUCT PAGE, CATALOGUE AND ENQUIRY FORM.

