GELEN

PRODUCT BROCHURE



GFW SERIES

FINE MATERIAL WASHERS

SPECIFICATION SAND FROM THE FINEST FEED.

GFW SERIES

THE FINES LEAVE OVER THE WEIR. THE SAND STAYS.

GFW fine material washers clean and dewater the finest sands. Slurry feeds a wide pool at the low end of an inclined tub; silt, clay and ultra-fine particles leave over the weir with the water, while the spirals carry the settled sand up the incline, drain it and drop it at the top. Eight models with feed up to 10 mm, in single (S) and twin (T) spiral designs.

8
MODELS IN THE SERIES

725 t/h
MAX. OUTPUT

1,676 mm
LARGEST SPIRAL Ø

90 kW
MAX. INSTALLED POWER



APPLICATIONS

CONCRETE & ASPHALT SAND
MANUFACTURED SAND
FINE NATURAL SAND
INDUSTRIAL SAND
FINES RECOVERY

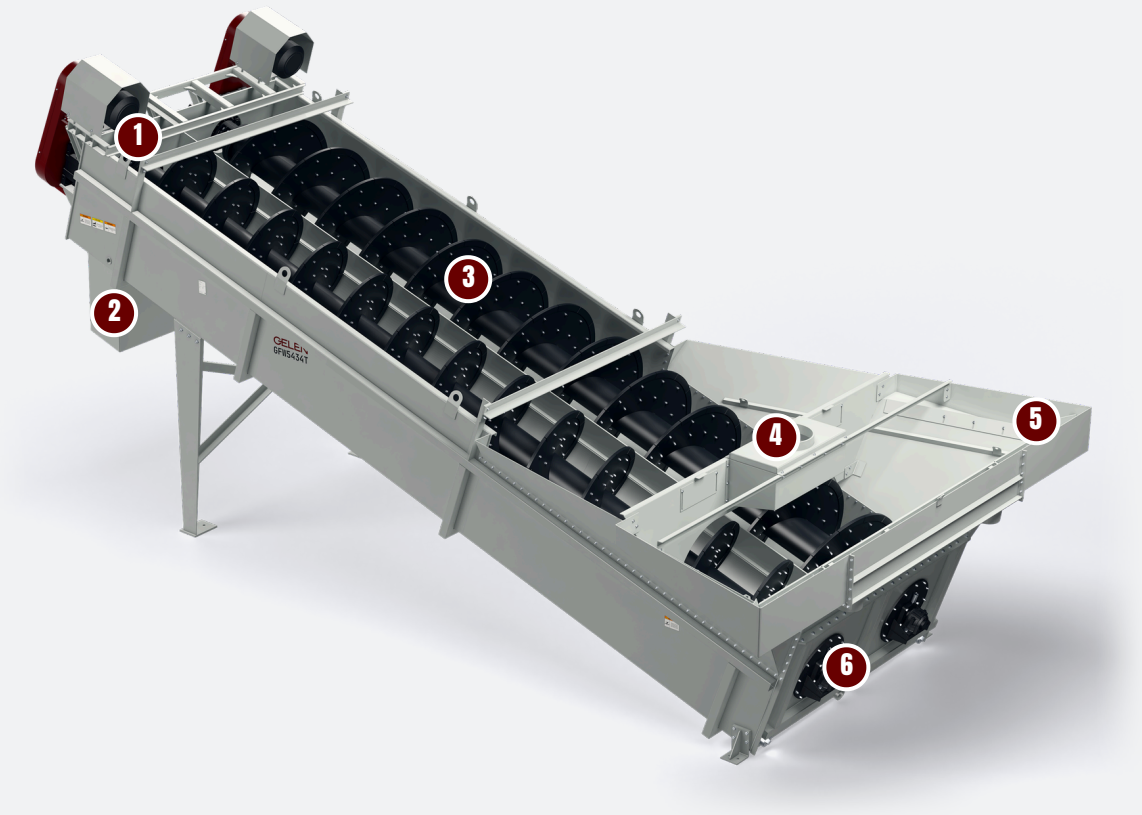

DESIGN

ANATOMY OF A GFW.

A tub, a slope and slow spirals: the pool washes, the weir takes the fines, the climb dewaters. Shown: a twin-spiral GFW5434T.

1 Gearbox drives

A heavy-duty gearbox and motor for each spiral, behind a guard at the top end, out of the water.

2 Sand discharge

Washed, drained sand drops from the chute at the top end, ready for the stockpile conveyor.

3 Twin spirals

Two spirals turn side by side and carry the settled sand up the tub. Single-spiral (S) models carry one.

4 Feed box

Slurry enters at the pool through the feed box, which spreads it across the tub.

5 Overflow weir

Water, silt, clay and ultra-fine particles leave over the weir. The water volume, feed rate and spiral speed set the cut.

6 Lower bearings

The spirals' lower ends turn in bearing housings bolted to the pool end of the tub.

For the finest sand

- Removes silt, clay and ultra-fine contaminants
- Wide pool for the fine particles to settle
- Specification-grade sand from a feed up to 10 mm
- Washes, classifies and dewaters in one machine

Single or twin

- Single (S) and twin (T) spiral designs
- Spirals from 915 to 1,676 mm in diameter
- A twin spiral doubles the output on the same length
- Water required stated for every model

Low upkeep

- Heavy-duty gearboxes, out of the water
- Spirals turning at 5 to 21 rpm
- Adjustable controls for water and speed
- Sized with the screens and pumps around it, as one sand line

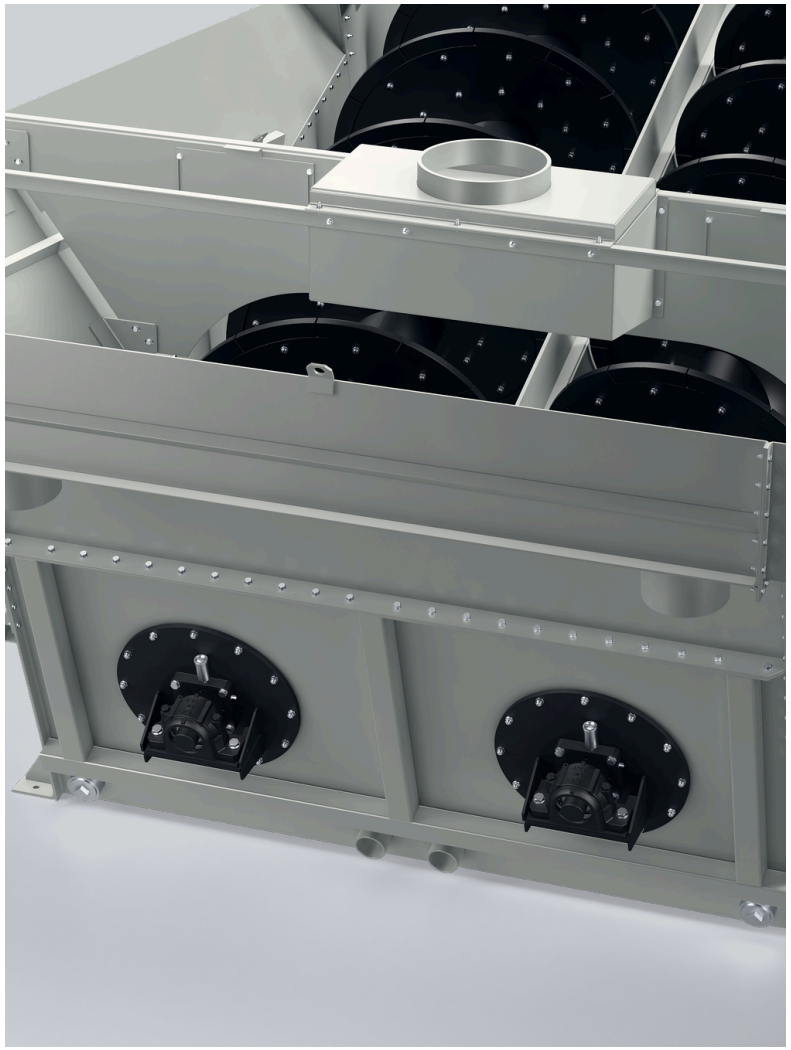

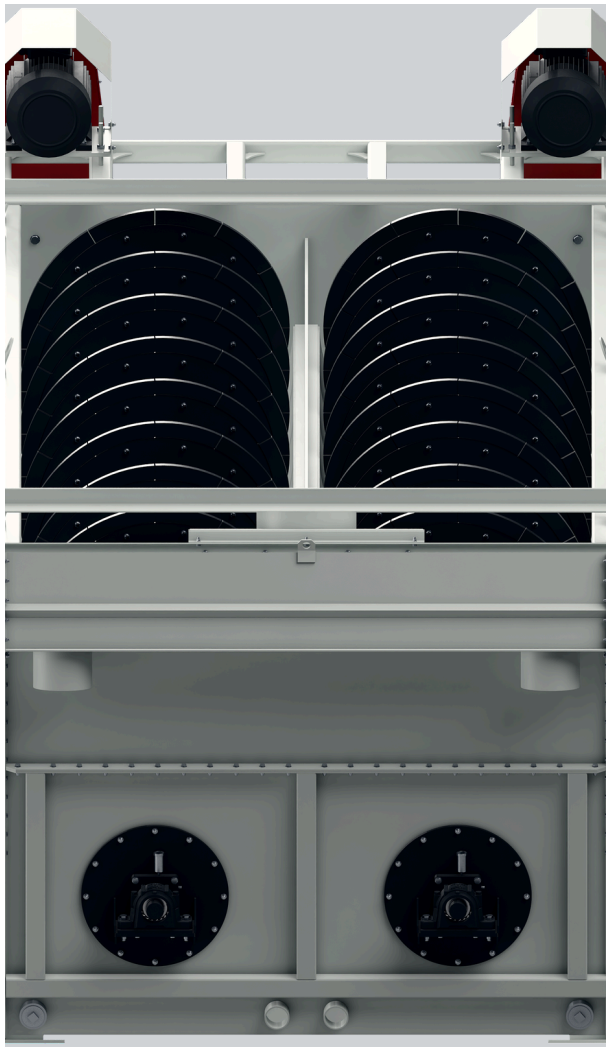



SPECIFICATIONS

FINE MATERIAL WASHERS - GFW SERIES

MODEL	SPIRAL Ø × LENGTH mm	FEED SIZE mm	MAX CAPACITY mtph	EST. WATER REQUIRED cu.m/h	POWER REQUIRED kW	SPEED rpm
GFW3625S	915x7620	10	22 - 90	163.5	11	10 - 21
GFW4432S	1120x9700	10	35 - 160	391	18.5	8 - 17
GFW5434S	1370x10010	10	60 - 250	475.1	30	7 - 14
GFW6636S	1676x10670	10	90 - 360	589	45	5 - 11
GFW3625T	915x7620	10	45 - 180	284.1	2 x 11	10 - 21
GFW4432T	1120x9700	10	70 - 315	635	2 x 18.5	8 - 17
GFW5434T	1370x10010	10	125 - 495	840.3	2 x 30	7 - 14
GFW6636T	1676x10670	10	180 - 725	993.1	2 x 45	5 - 11

Values are nominal and depend on feed material, gradation and moisture. Metric units; an imperial edition of this brochure is available on request.

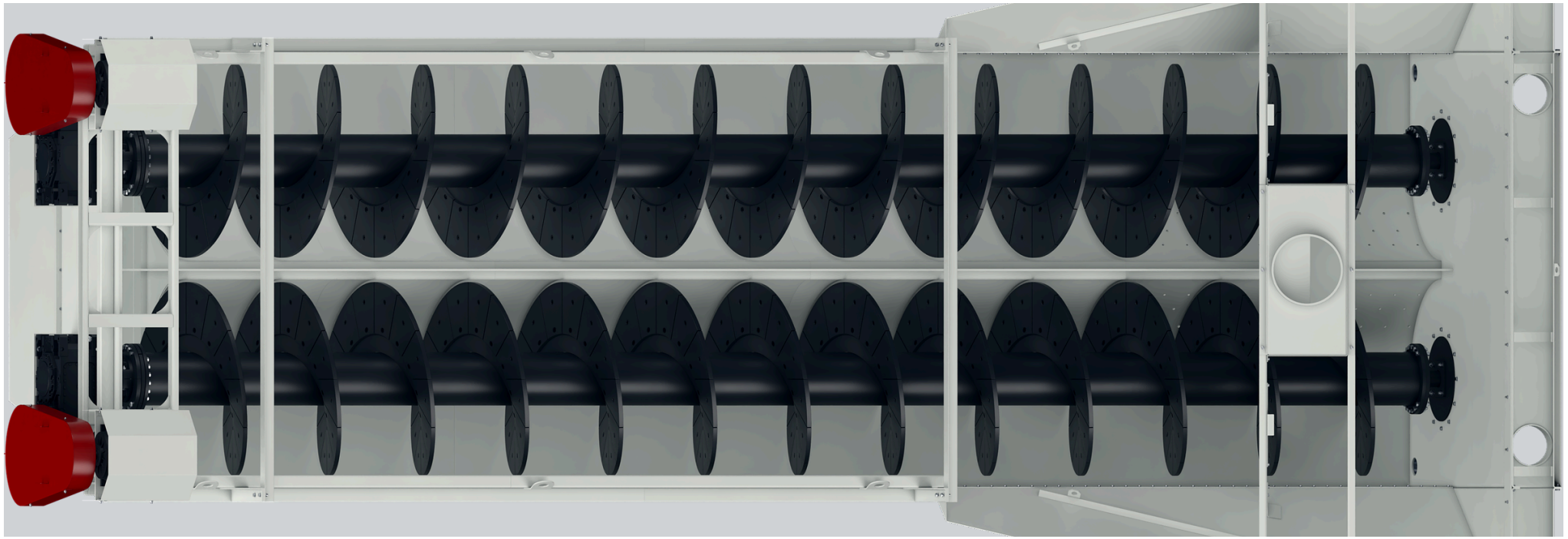

CHOOSE YOUR MODEL

ONE SERIES. THE WHOLE RANGE.

Eight models in two designs: single-spiral (S) and twin-spiral (T) machines on four spiral sizes. Each bar runs from a model's lowest output to its highest.

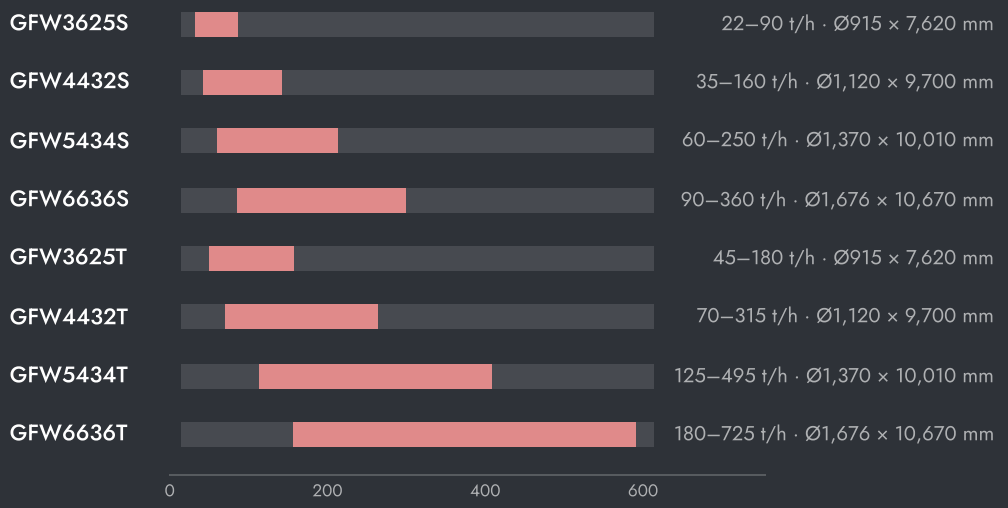

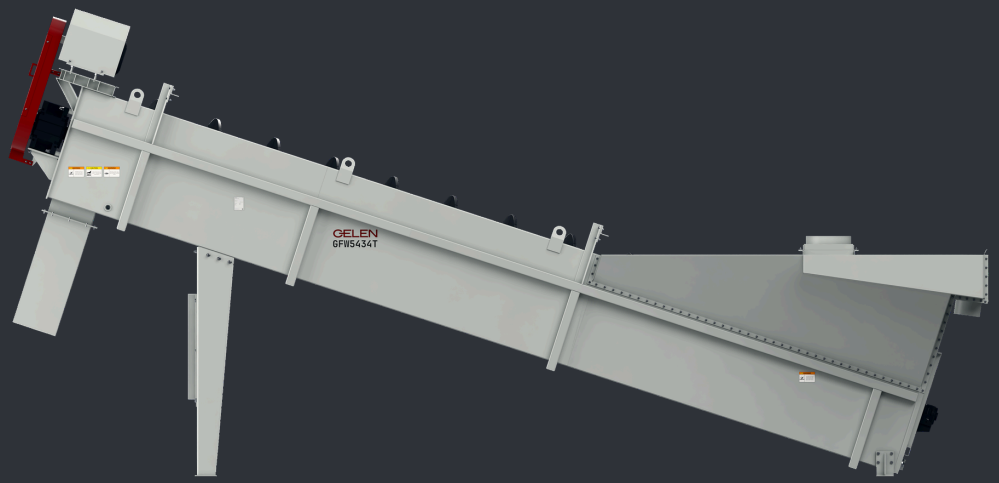

SETTING THE MACHINE

- Feed a steady slurry. Surges of solids or water move the cut point and let sand escape over the weir.
- Check the overflow for sand. If good sand leaves with the water, reduce the water volume or the feed rate first.
- Supply the water each model needs; too little leaves fines in the sand.
- Inspect the flights on a schedule. Worn flight edges reduce both capacity and dewatering.

HOW TO CHOOSE

01 Start from the sand: tonnage, gradation, fines content and the product you need.

02 Choose the spiral size for the tonnage, and a twin spiral where the plant has no room for a longer machine.

03 GELEN engineering sizes the washer and its water circuit together, for your plant.



IN THE PLANT

WHERE IT WORKS.

A GFW sits under a wet screen or after a VSI crusher. It takes the sand fraction with its water, sends the silt, clay and ultra-fine particles away over the weir, and delivers a washed, drained sand ready for concrete and asphalt specifications.

TYPICAL PLANT FLOW

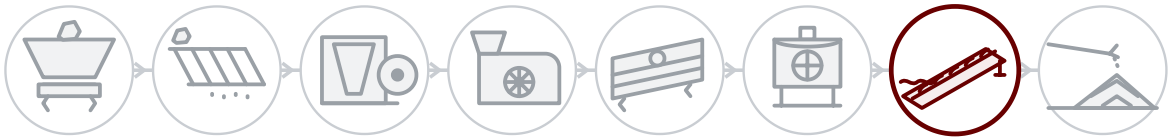

01 Blast & feed
02 Scalping
03 Primary crushing
04 Secondary crushing
05 Screening
06 Tertiary & sand
07 Washing
08 Stockpile & load-out

BEHIND EVERY MACHINE

Field service

Installation, commissioning and inspection by GELEN engineers, on site anywhere we sell.

Spares by serial number

Every machine has a serial and a QR on its nameplate. Scan it, and its parts list, manuals and service history open — and a spares order is one tap away.

Remote support

Production data, alarms and performance analytics from every connected plant, with support from the works.

CONTACT

TALK TO THE WORKS.

ASO 1. OSB, Oğuz Cd. No: 31
06930 Sincan, Ankara, Türkiye

PHONE	+90 312 267 06 20
E-MAIL	gelenmakina@gelenmakina.com
WEB	gelenmakina.com

Full specifications, drawings and every other GELEN machine are in the Products Catalogue.

SCAN FOR THE PRODUCT PAGE, CATALOGUE AND ENQUIRY FORM.

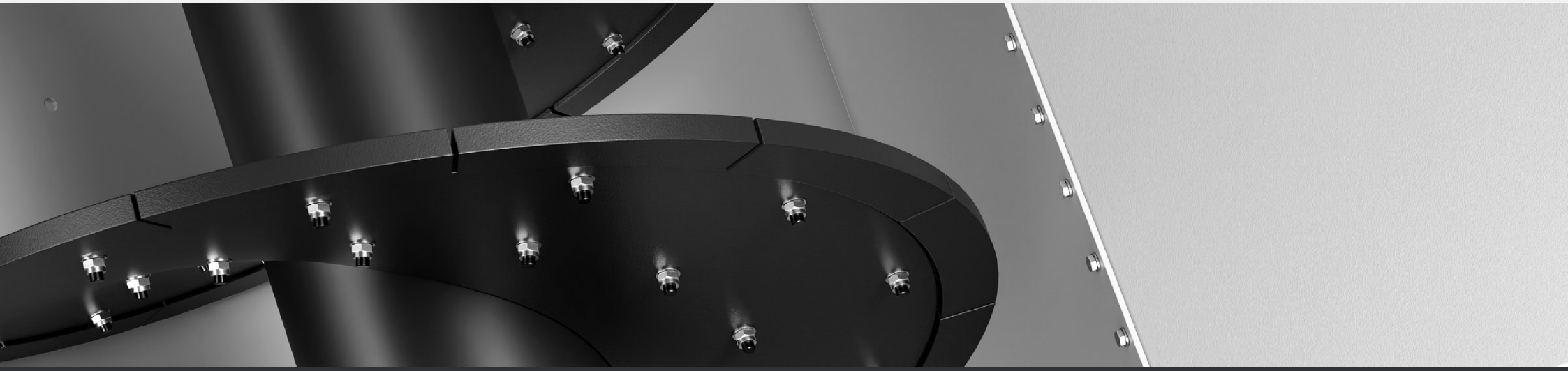

GELEN
CRUSHING & SCREENING PLANTS SINCE 1981

GELENMAKINA.COM