GELEN

PRODUCT BROCHURE



GHC SERIES

CONE CRUSHERS

HYDRAULIC SETTING. ROCK-ON-ROCK REDUCTION.

GHC SERIES

CUBICAL PRODUCT, SET FROM THE PANEL.

GHC cone crushers take the secondary and tertiary stages of a plant. An eccentric gyrates the mantle inside a fixed concave, and the rock is squeezed between them until it leaves at the closed-side setting. The hydraulic setting raises or lowers the head to set the product, and lifts it to clear the chamber. Four models, from 90 to 315 kW, for stationary and mobile plants.

4
MODELS IN THE SERIES

11.8 in
MAX. FEED SIZE

661 stph
MAX. OUTPUT

422 hp
MAX. INSTALLED POWER

APPLICATIONS

SECONDARY CRUSHING · TERTIARY CRUSHING · HARD & ABRASIVE ROCK · CONCRETE & ASPHALT AGGREGATE · MOBILE PLANTS



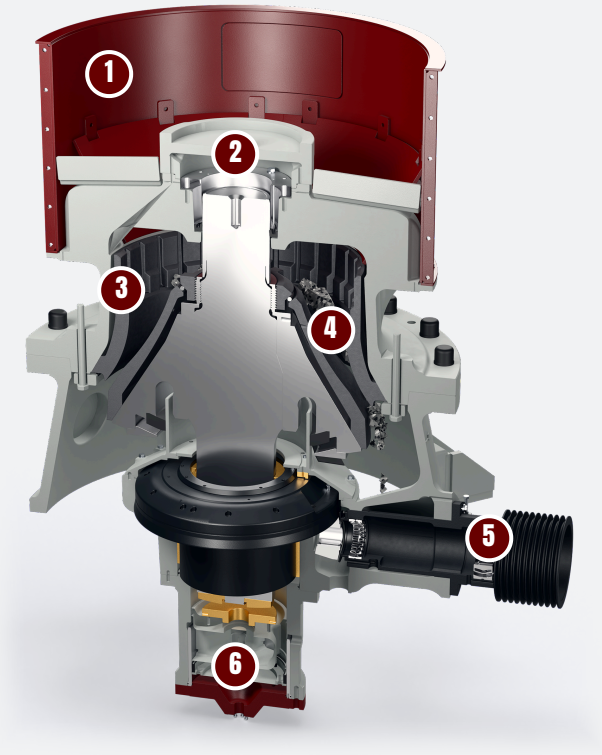

DESIGN

ANATOMY OF A GHC.

A gyrating mantle, a fixed concave and a hydraulic piston under the main shaft: the gap between the liners opens and closes once per turn, all the way round. Shown cut away: a GHC45.

1 Feed hopper

Feed drops through the hopper and past the spider into the annular chamber between the concave and the mantle.

2 Spider and bushing

The spider bridges the top shell and carries the top of the main shaft in its bushing.

3 Manganese concave and mantle

The only parts that wear. Fine, medium and extra-coarse chambers suit the feed.

4 Rock-on-rock compression

The gyrating mantle sweeps inside the fixed concave. Rock is squeezed as the gap closes and works down to leave at the closed-side setting.

5 Countershaft and bevel gear

The V-belt pulley turns the pinion shaft; the pinion drives the crown gear on the eccentric, which gyrates the main shaft.

6 Hydraulic setting

The piston under the main shaft raises or lowers the head to set the closed-side setting, and lifts it to clear the chamber.

Set by hydraulics

- Closed-side setting adjusted hydraulically, without shims
- The head lifts to clear a blocked chamber
- Setting corrected for liner wear as the liners wear
- Disc-spring stacks let uncrushable tramp pass

The right chamber

- Fine, medium and extra-coarse concaves (F, M, EC)
- Secondary and tertiary duties on one frame
- Feed up to 300 mm, settings from 6 to 50 mm
- Manganese liners, the only wearing parts

Built into the plant

- For stationary and mobile installations
- V-belt drive from a single motor
- Sized with the screens and conveyors around it, as one circuit
- Four sizes, from 25 to 600 t/h

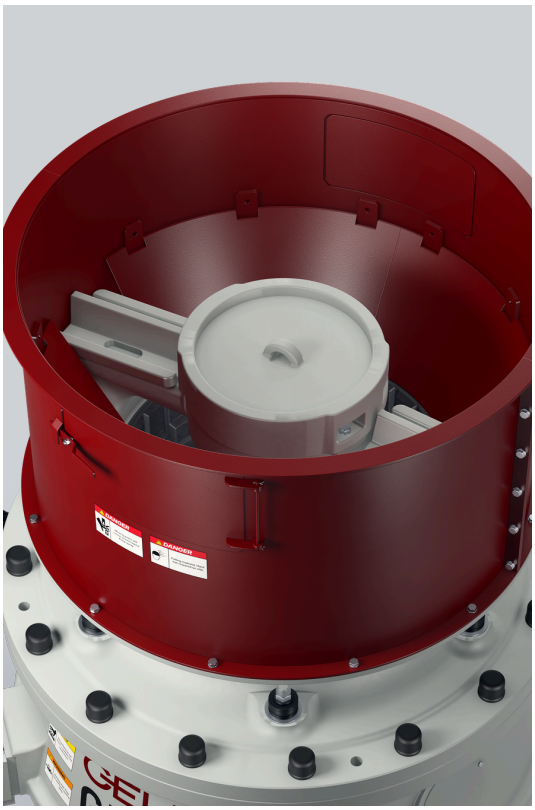

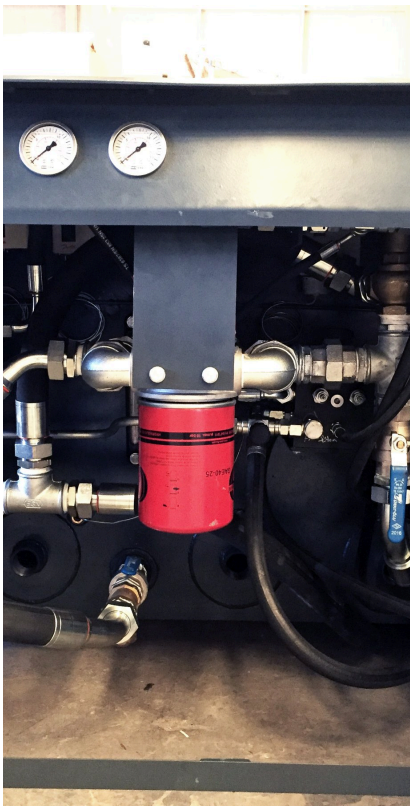

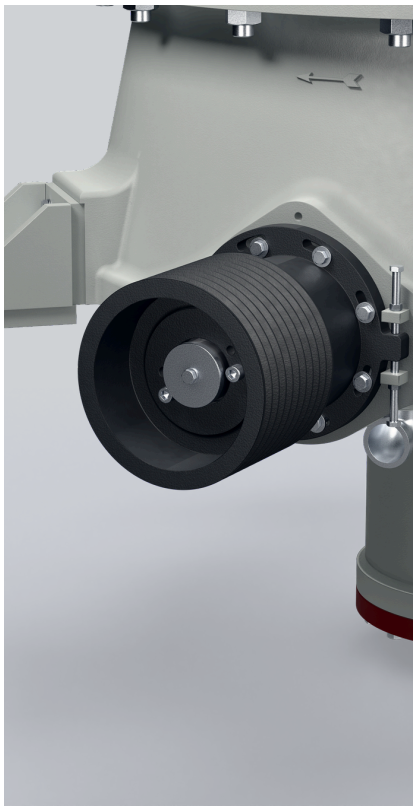

SPECIFICATIONS

CONE CRUSHERS - GHC SERIES

MODEL	MOTOR hp	CAPACITY stph	CLOSE SIDE SETTING in	MAX. FEED SIZE in	THROW RANGE in	CONCAVE TYPES
GHC SERIES CONE CRUSHERS						
GHC28	121	28-132	0.2 - 1.3	1.4 - 5.1	0.5 - 1.0	F, M, EC
GHC37	177	50-198	0.7 - 1.5	1.8 - 7.5	0.6 - 1.4	F, M, EC
GHC45	268	88-386	0.4 - 1.8	2.0 - 8.7	0.6 - 1.7	F, M, EC
GHC56	422	176-661	0.6 - 2.0	2.6 - 11.8	0.7 - 2.0	F, M, EC

Values are nominal and depend on feed material, gradation and moisture. Imperial units converted from the metric originals; a metric edition of this brochure is available on request.

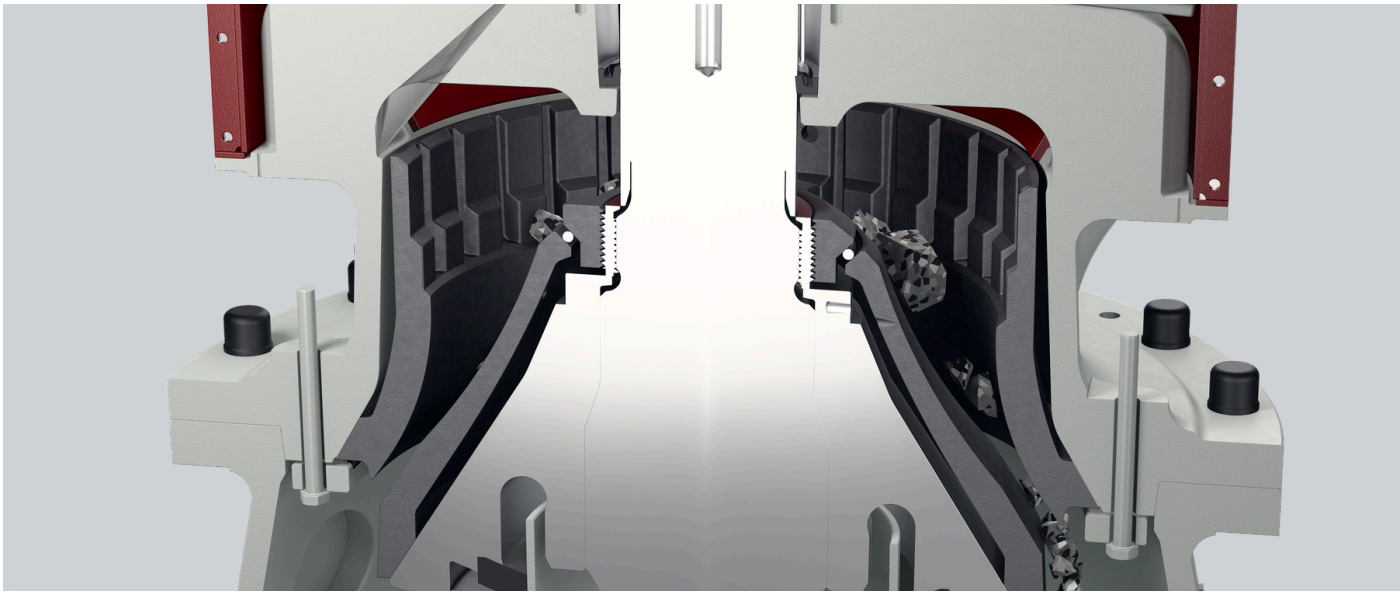

CHOOSE YOUR MODEL

ONE SERIES. THE WHOLE RANGE.

Four models, from the GHC28 to the GHC56. Each bar runs from a model's lowest output to its highest; where it sits in that range depends on the chamber, the setting and the rock.

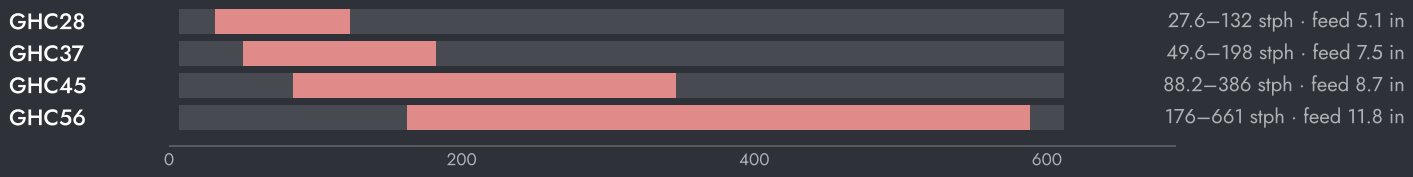



SETTING THE MACHINE

- Choke-feed the chamber. A full chamber crushes rock on rock and makes a more cubical product.
- Keep the feed well graded and spread round the chamber; one-sided feed wears the liners unevenly.
- Check the setting as the liners wear, and correct it from the hydraulics.
- Change the concave and mantle as a pair, before they wear through.

HOW TO CHOOSE

01 Start from the rock: tonnage, feed size, hardness and the product you need.

02 Choose the chamber for the feed size, and the setting for the product.

03 GELEN engineering sizes the cone with the screens in a closed circuit, for your plant.

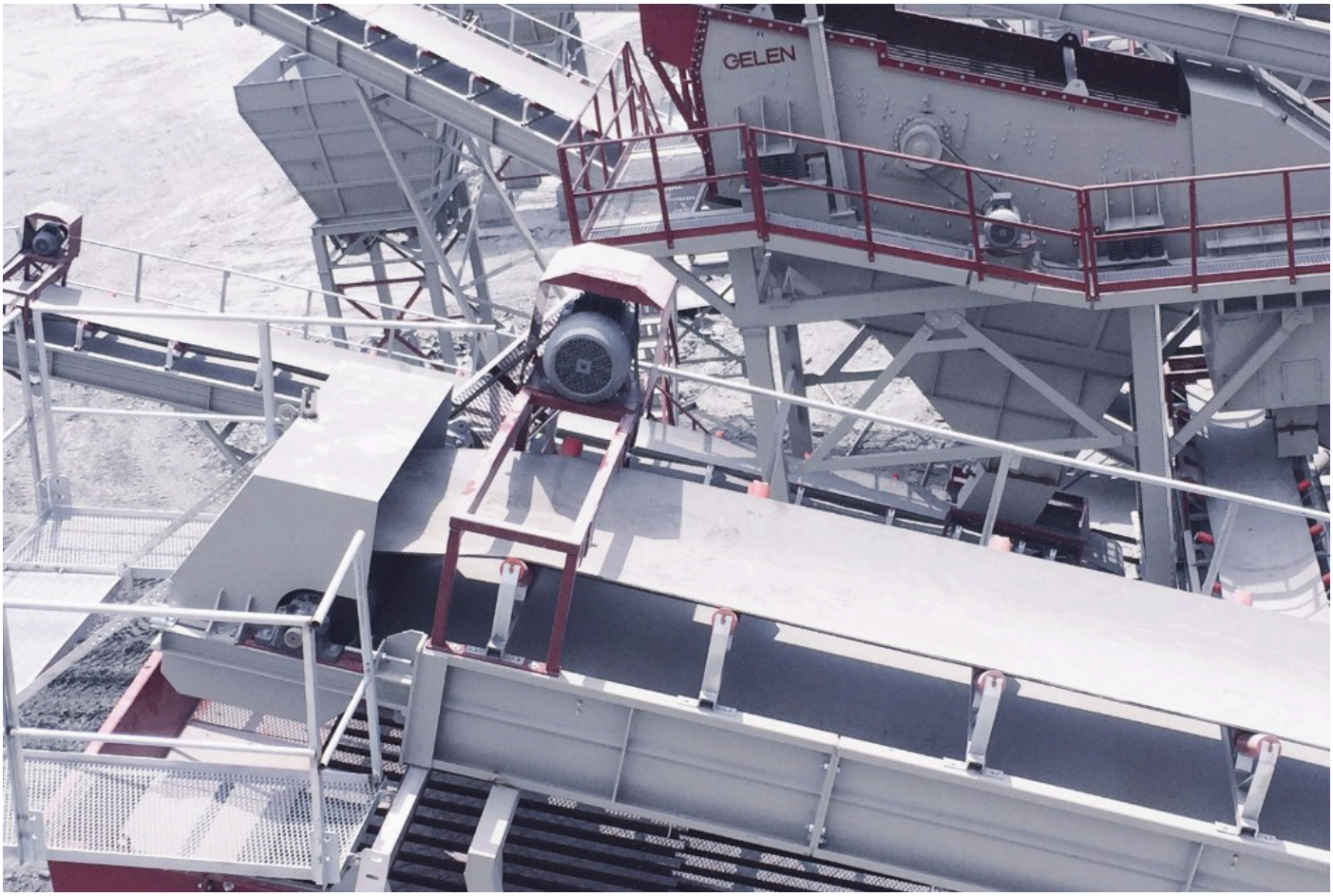

IN THE PLANT

WHERE IT WORKS.

A GHC works after the primary crusher, in closed circuit with a screen: the screen's oversize returns to the cone, so every tonne leaves at the size the plant sells. In the tertiary stage it makes the cubical chips that concrete and asphalt need.

TYPICAL PLANT FLOW

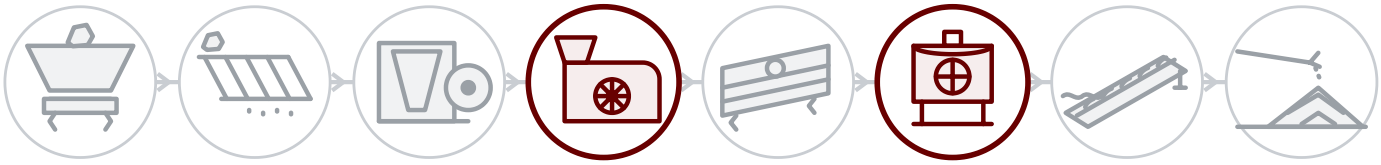

BEHIND EVERY MACHINE

Field service

Installation, commissioning and inspection by GELEN engineers, on site anywhere we sell.

Spares by serial number

Every machine has a serial and a QR on its nameplate. Scan it, and its parts list, manuals and service history open — and a spares order is one tap away.

Remote support

Production data, alarms and performance analytics from every connected plant, with support from the works.

CONTACT

TALK TO THE WORKS.

ASO 1. OSB, Oğuz Cd. No: 31
06930 Sincan, Ankara, Türkiye

PHONE	+90 312 267 06 20
E-MAIL	gelenmakina@gelenmakina.com
WEB	gelenmakina.com

Full specifications, drawings and every other GELEN machine are in the Products Catalogue.

SCAN FOR THE PRODUCT PAGE, CATALOGUE AND ENQUIRY FORM.

