GELEN

PRODUCT BROCHURE



AF SERIES

APRON FEEDERS

HEAVY-DUTY FEEDING OF RUN-OF-MINE, AT A STEADY RATE.

AF SERIES

BUILT FOR THE TOUGHEST FEEDING DUTY.

AF apron feeders are built for the toughest feeding duty: large, heavy and sharp run-of-mine rock dumped straight from trucks. Overlapping steel pans on tractor chains carry the load from the hopper or stockpile to the primary crusher at a controlled, variable speed. Three standard sizes, and other widths and lengths built to the process.

3
MODELS IN THE SERIES

1,840 t/h
MAX. THEORETICAL OUTPUT

45 kW
MAX. INSTALLED POWER

10.0 m long
UP TO

APPLICATIONS

RUN-OF-MINE FROM TRUCKS | PRIMARY CRUSHER FEED | HOPPER & STOCKPILE RECLAIM | MINING & ORE | HEAVY, SHARP & ABRASIVE ROCK





DESIGN

ANATOMY OF AN AF.

Steel pans on tractor chains, driven at the head and tensioned at the tail: a heavy conveyor built to take the impact of a truckload. Shown: an AF4826, 48 in × 26 ft.

1 Head shaft and reducer

A hot-rolled steel head shaft with bolted sprockets, driven by a shaft-mounted planetary reducer on a torque arm.

2 Overlapping pans

Pans reinforced with centre packers run close to full-length impact rails, preventing distortion.

3 Carrier rollers

Rollers under both strands carry the loaded run and the return.

4 Tail take-up

Tail-end tensioning with take-up screws on shaftless traction wheels.

5 Tractor chains

Tractor chains, bolted sprockets and traction wheels, all standard in earth-moving equipment.

6 Controlled discharge

Run-of-mine from a hopper or stockpile leaves the head as a steady, even flow to the next machine.

Built for impact

- Reinforced cast steel pans with centre packers
- Close to full-length impact rails prevent distortion
- Hot-rolled steel head shaft with bolted sprockets

Controlled feeding

- Variable speed sets the feed rate to the crusher
- Overlapping pans move the load positively, without flooding
- Hydraulic tail-end tensioning with take-up screws

Proven running gear

- Tractor chains, sprockets and traction wheels from earth-moving equipment
- Optional high-manganese pans where abrasion is a concern
- Other widths and lengths to suit the process

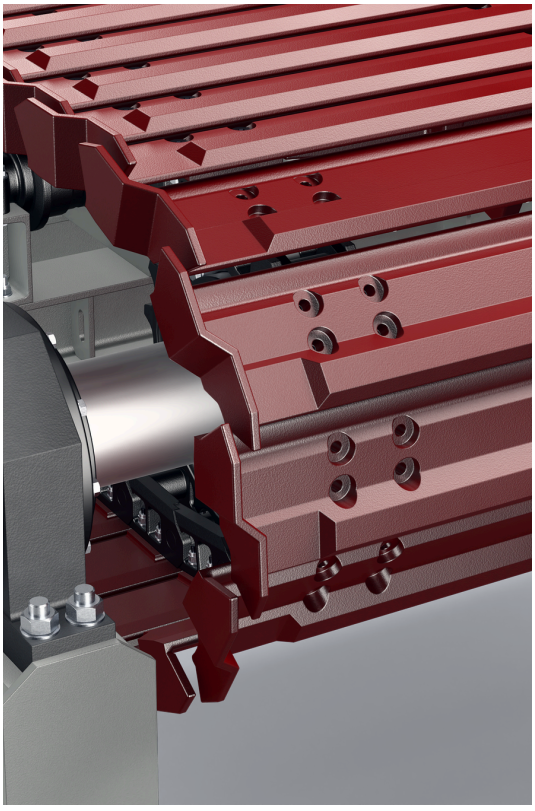

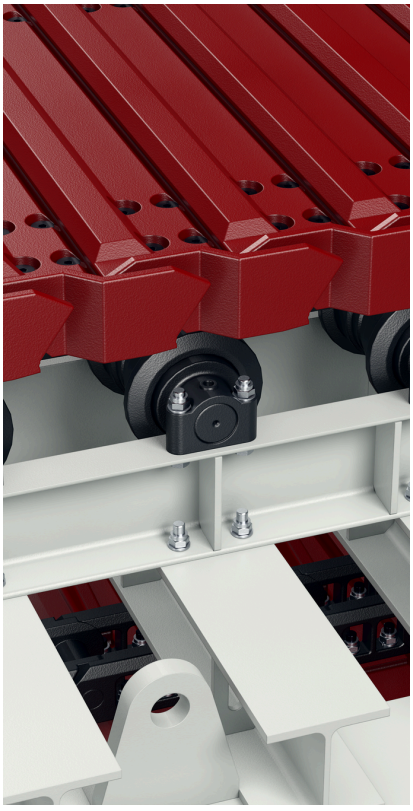



SPECIFICATIONS

APRON FEEDERS - AF SERIES

MODEL	WIDTH mm	LENGTH mm	POWER kW	THEORETICAL CAPACITY mtph
AF1500	1500	6000	30	350 - 1,040
AF1800	1800	8000	37	500 - 1,490
AF2000	2000	10000	45	610 - 1,840

Values are nominal and depend on feed material, gradation and moisture. Metric units; an imperial edition of this brochure is available on request.
Theoretical capacity is calculated for material with a bulk density of 1.6 t/m^3 (100 lb/ft^3), a bed depth of half the pan width and pan speeds of 4–12 m/min. Actual capacity depends on the material, lump size, skirt height and chain speed.



CHOOSE YOUR MODEL

ONE SERIES. THE WHOLE RANGE.

Three standard sizes, from the 1.5 × 6 m AF1500 to the 2.0 × 10 m AF2000. Each bar spans a model's theoretical capacity at a bulk density of 1.6 t/m³; the note gives its size.

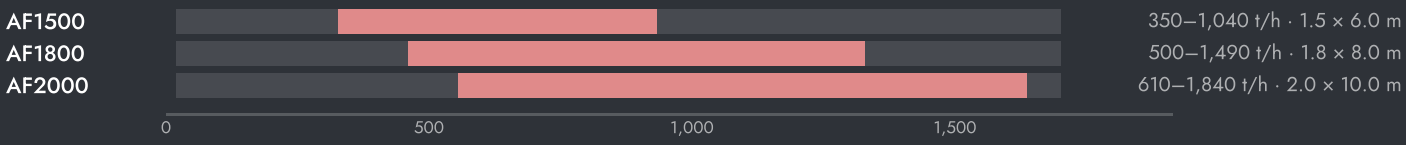

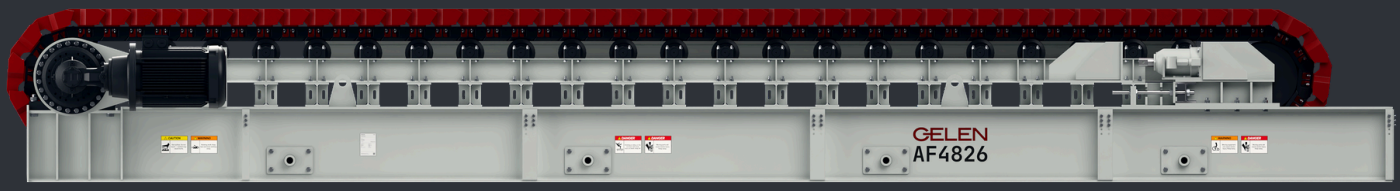

SETTING THE MACHINE

- Keep material on the pans under the hopper, so dumped rock lands on rock, not on the pans.
- Run at the lowest speed that meets the crusher's demand; lower speed means less wear.
- Check chain tension, sprocket teeth and pan condition on a regular schedule.
- Clear spillage under the feeder, so it does not build up against the return strand.

HOW TO CHOOSE

01 Start from the truck or loader: the largest lump, the tonnage and the hopper.

02 Choose the pan width for the lump size and the length for the hopper; read the theoretical capacity off the bar.

03 Set the speed to the crusher; the variable drive follows its demand.



IN THE PLANT

WHERE IT WORKS.

The apron feeder is the first machine after the truck. Under the dump hopper, it carries run-of-mine to the primary crusher at the speed the crusher can take, from slow feeding of the largest rock to faster rates on smaller material.

TYPICAL PLANT FLOW

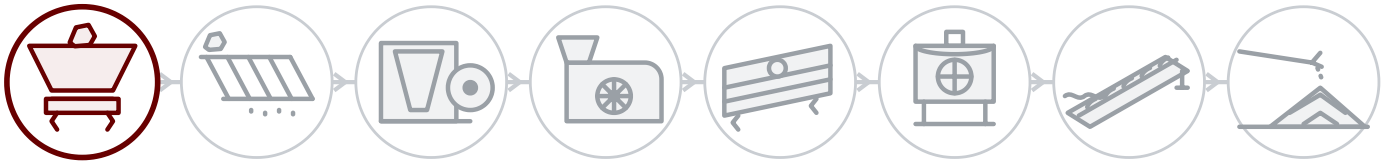

01 **Blast & feed**

02 Scalping

03 Primary crushing

04 Secondary crushing

05 Screening

06 Tertiary & sand

07 Washing

08 Stockpile & load-out

BEHIND EVERY MACHINE

Field service

Installation, commissioning and inspection by GELEN engineers, on site anywhere we sell.

Spares by serial number

Every machine has a serial and a QR on its nameplate. Scan it, and its parts list, manuals and service history open — and a spares order is one tap away.

Remote support

Production data, alarms and performance analytics from every connected plant, with support from the works.

CONTACT

TALK TO THE WORKS.

ASO 1. OSB, Oğuz Cd. No: 31
06930 Sincan, Ankara, Türkiye

PHONE	+90 312 267 06 20
E-MAIL	gelenmakina@gelenmakina.com
WEB	gelenmakina.com

Full specifications, drawings and every other GELEN machine are in the Products Catalogue.

SCAN FOR THE PRODUCT PAGE, CATALOGUE AND ENQUIRY FORM.

